Return to: (enclose self-addressed stamped envelope)

Name: Return to:
Centex Homes
6702 Lone Oak Blvd.
Naples, FL 34109

Address: Attn: Diana Jliss

910.50

This Instrument Prepared by:
Ruden, McClosky, Smith,
Schuster & Russell, P.A.
5811 Pelican Bay Boulevard
Suite 210
Naples, FL 34108

4129456

OR2801 PG0805

SPACE ABOVE THIS LINE FOR PROCESSING DATA SPACE ABOVE THIS LINE FOR PROCESSING DATA

DECLARATION OF CONDOMINIUM OF BAY POINTE AT BONITA BAY, A CONDOMINIUM

CENTEX REAL ESTATE CORPORATION, a Nevada corporation ("Developer"), hereby makes this Declaration of Condominium of Bay Pointe at Bonita Bay, a Condominium ("Declaration") to be recorded amongst the Public Records of Lee County, Florida ("County"), where the "Land" (as hereinafter defined) is located, and states and declares:

1. SUBMISSION STATEMENT

Developer is the owner of record of the "Condominium Property" (as hereinafter defined) and does hereby submit "Phase A" (as hereinafter defined) to condominium ownership pursuant to the Condominium Act, Chapter 718, Florida Statutes, as amended through the date of recording this Declaration amongst the Public Records of the County ("Act").

2. NAME AND ADDRESS

The name of this condominium is Bay Pointe at Bonita Bay, a Condominium ("Condominium"). The street address of the Condominium is 4700 Montego Pointe Way, Bonita Springs, Florida, 34134.

3. PHASE CONDOMINIUM - LAND

The land which will have become part of the Condominium Property when, as and if all of the "Phases" (as hereinafter defined) are added to the Condominium Property is described in Exhibit A ("Land") attached hereto and made a part hereof. The legal description of the portion of the Land ("Initial Phase Land") constituting "Phase A" of the Condominium Property (as hereinafter defined) is set forth on Exhibit B attached hereto and made a part hereof. The legal descriptions of the portions of the Land constituting each "Subsequent Phase" (Phases B through Z) (as hereinafter defined) of the Condominium Property are also set forth on Exhibit B, attached hereto and made a part hereof.

4. DEFINITIONS

The terms contained in this Declaration shall have the meanings given in the Act and, for clarification, the following terms have the following meanings:

4.1. "Act" means the Condominium Act, Chapter 718, Florida Statutes (1995), as amended through the date of recording this Declaration amongst the Public Records of the County.

4.2. "Additional Owner" means Bonita Bay Properties, Inc., a Florida corporation and all of such entities' successors and assigns. (The Additional Owner is also referred to herein as the

• RECORD VERIFIED - CHARLIE GR[illegible], CLERK •
• By: J. Miller, D.C. •

Declarant.) Developer is purchasing the Land from Additional Owner in three stages. Developer as of the date of recording this Declaration has closed on the first stage which consists of Parcel 1, including the Amenities Center, as described in the Declaration of Protective Covenants and Restrictions for a Portion of Bonita Bay Unit Thirty-Seven recorded in Official Records Book 2713, Page 3287, of the Public Records of the County ("Unit Thirty-Seven Declaration"). Additional Owner as of the date of recording this Declaration owns the remaining portions of the Land (Parcel 2 and Parcel 3). Notwithstanding anything contained herein to the contrary, in the event that Additional Owner chooses to exercise its rights to create a Bay Pointe at Bonita Bay, a Condominium(s) and assume its obligations under this Declaration related thereto Additional Owner shall record a document stating its election in the Public Records of the County. Notwithstanding the foregoing, a Home Owner or other purchaser of a portion of the Land shall not, solely by the purchase, be deemed a successor or assign of Additional Owner or the rights of Additional Owner under this Declaration, unless such purchaser is specifically designated as such in an instrument executed by Additional Owner. In addition, if any person obtains title to all or any portion of the Land then owned by Additional Owner as a result of a foreclosure of any mortgage or deed in lieu thereof, such person may elect to become the Additional Owner by a written election recorded in the Public Records of the County, and regardless of such election, such person may appoint as Additional Owner any third party who acquires title to all or any portion of the Land owned by Bonita Bay Properties, Inc. by a written appointment instrument recorded in the Public Records of the County. Any subsequent Additional Owner shall not be liable for any default or obligations incurred by any prior Additional Owner or Developer hereunder, except as same may be expressly assumed by the subsequent Additional Owner.

OR2801 PG0806

4.3. "Articles" mean the Articles of Incorporation of the Association, attached as Exhibit C and incorporated herein by reference, and any amendments thereto.

4.4. "Association" means Bay Pointe at Bonita Bay Condominium Association, Inc., a Florida corporation not for profit, organized to administer Bay Pointe at Bonita Bay , including each Phase of this Condominium and having as its members the Home Owners and, subject to the other provisions of this Declaration, owners of any other condominium created within Bay Pointe at Bonita Bay . The Association is a "Neighborhood Association" (as defined in the Community Documents).

4.5. "Board" means Board of Directors of the Association.

4.6. "Bonita Bay" means the name given to the planned development being developed by Declarant in the County in accordance with the Community Declaration.

4.7. "Bylaws" mean the Bylaws of the Association, attached hereto as Exhibit D and incorporated herein by reference, and any amendments thereto.

4.8. "Common Elements" mean:

4.8.1. The Condominium Property, other than the Home;

4.8.2. Easements through the Home for conduit ducts, plumbing, wiring and other facilities for furnishing of utility services to Home and the Common Elements;

4.8.3. An easement of support in every portion of a Home which contributes to the support of a "Building" (as hereinafter defined) submitted to condominium ownership;

4.8.4. Property and installations required for the furnishing of utility services and other services for more than one Home, the Common Elements, or a Home other than the Home containing the installation; and

4.8.5. Such portion or portions of the Land, when, as and if same are submitted to condominium ownership.

4.9. "Community Association" means Bonita Bay Community Association, Inc., a Florida corporation not for profit, organized to administer the Community Declaration and having among its members, all owners of fee simple title to a "Plot" which has been assigned "Property Units" and which is subject to assessment by the Community Association (as such terms are defined in the Community Declaration), including the Home Owners.

4.10. "Community Declaration" means the Declaration of General Protective Covenants and Restrictions for Bonita Bay recorded in Official Records Book 1778, Page 3516, of the Public Records and all amendments thereto, whereby portions of the real property at Bonita Bay are set aside from time to time by Declarant in accordance with the plan for development set forth therein and whereby the "Common Expenses" (as defined therein) of the land areas designated therein as "Common Areas" are made specifically applicable to Home Owners to be collected by the Community Association. The Seventeenth Amendment to Declaration of General Protective Covenants and Restrictions for Bonita Bay recorded in Official Records Book 2314, Page 0551, of the Public Records of the County and the Twenty-Fourth Amendment to the Declaration of General Protective Covenants and Restrictions for Bonita Bay recorded in Official Records Book 2412, Page 0276, of the Public Records of the County (collectively "Declaration Amendment") are the documents which commit Bay Pointe at Bonita Bay to the provisions of the Community Declaration.

OR2801 PG0807

4.11. "Community Documents" mean the Community Declaration, the Articles of Incorporation and Bylaws of the Community Association, any rules and regulations promulgated by the Community Association and all of the documents and instruments referred to therein, and any amendments to any of the documents thereto.

4.12. "Condominium" means that portion of the Land in Bay Pointe at Bonita Bay described in Exhibit A attached hereto and the improvements thereon being submitted to condominium ownership pursuant to this Declaration as the same may be amended from time to time.

4.13. "Condominium Property" means the real property submitted to condominium ownership as part of the Condominium and all improvements thereon, including, but not limited to, the Home and the Common Elements. All easements within the Condominium Property described and set forth in this Declaration are intended to comply with Section 718.104(4)(m) of the Act. Notwithstanding anything contained herein to the contrary, however, the term "Condominium Property" shall not include any telecommunications lines and equipment owned by a utility and/or telecommunication firm(s) and/or other legal entity(ies) which have contracted with or have imposed other legal requirements upon Developer, Declarant, the Community Association and/or the Association to provide a utility or telecommunications service and/or equipment nor shall Condominium Property include telecommunications equipment, if any, owned by Developer or Declarant, the title to which is hereby specifically reserved unto Developer or Declarant, as the case may be, their respective successors and/or assigns. No portion of the land within any Subsequent Phase shall be included in the term "Condominium Property" until and unless such Subsequent Phase is submitted to condominium ownership by amendment to this Declaration.

4.14. "County" means Lee County, Florida.

4.15. "Declarant" means Bonita Bay Properties, Inc., a Florida corporation and all of such entities' successors and assigns. (The Declarant is also referred to herein as the Additional Owner.)

4.16. "Declaration" means this document and any amendments or supplements hereto.

4.17. "Developer" means Centex Real Estate Corporation, a Nevada corporation, its grantees, corporate successors and assigns. Developer shall have the right to assign any and all of the rights and privileges reserved for Developer under this Declaration and the other Neighborhood Documents. A Home Owner shall not, solely by the purchase of a Home, be deemed a successor or assign of Developer or of the rights of Developer under the Neighborhood Documents unless such Home Owner is specifically so designated as a successor or assign of such rights in the instrument of conveyance or any other instrument executed by Developer. Developer is the developer of the

Condominium only and has no other interest in any other portion of Bonita Bay except for Harbor Lakes Condominium, Harbor Landing Condominium, and Oakwood Carriage Homes II at Bonita Bay, condominiums which Developer is developing or has developed in Bonita Bay. In addition, if Additional Owner or its designee(s) obtains title or holds title to any portion of the Land and Developer does not close on the purchase of the remaining parcels of the Land pursuant to the terms and provisions of the Deposit Receipt, Sales and Option Agreement dated January 12, 1996 between Developer and Additional Owner ("Contract"), then Additional Owner shall have the absolute right, but not the obligation to create a Bay Pointe at Bonita Bay, a Condominium or another association (condominium or homeowners) to govern such portions of the Land which it owns. The owners of such portions of the Land conveyed by Additional Owner to such owners shall have use rights to portions of the "Association Property" (as defined in the Act) including, but not limited to, the Amenities Center, with the Home Owners in accordance with the provisions of this Declaration.

OR2801 PG0808

4.18. "Bay Pointe at Bonita Bay " means a portion of the real property within Bonita Bay, more particularly described on Exhibit A hereto, upon which Developer intends to develop the Condominium. Bay Pointe at Bonita Bay is one of the "Neighborhoods" (as defined in the Community Declaration) within Bonita Bay. The "Neighborhood" consists only of those portions of the Land which Developer has acquired. The "Neighborhood" will be enlarged in the event that Developer closes on the remaining portions of the Land in accordance with the Contract or in the event Developer does not so close but Additional Owner elects to add such portion of the Land to the Neighborhood. The "Voting Member" (as defined in the Articles) shall cast only those votes for those portions of the Land which Developer has acquired and has no right to cast the votes for the remaining portions of the Land in "Unit Thirty-Seven" as defined in the Unit Thirty-Seven Declaration in the event that Developer does not acquire such property from Additional Owner in accordance with the Contract; provided, however, in the event Additional Owner adds such property to the Neighborhood, such Voting Member shall also cast the votes with respect to such property.

4.19. "Home" means "unit" as described in the Act and is that portion of the Condominium Property within the Condominium which is subject to exclusive ownership.

4.20. "Home Owner" means "unit owner," as defined in the Act, and is the owner of a Home.

4.21. "Institutional Mortgagee" means any lending institution having a mortgage lien upon a Home, including, but not limited to, any of the following institutions or entities: (i) a federal or state savings and loan association or bank doing business in the State of Florida or a life insurance company doing business in Florida which is approved by the Commissioner of Insurance of the State of Florida, or bank or real estate investment trust, or a mortgage banking company licensed to do business in the State of Florida, or any subsidiary thereof licensed or qualified to make mortgage loans in the State of Florida or a New York State banking corporation or a national banking association chartered under the laws of the United States of America; or (ii) any and all investing or lending institutions ("Lender") which have loaned money to Developer in order to enable Developer to acquire, or construct improvements upon, any portion of Bay Pointe at Bonita Bay and which holds a first mortgage upon such portion of Bay Pointe at Bonita Bay as security for such loan; or (iii) any pension or profit sharing funds qualified under the Internal Revenue Code; or (iv) the Veterans Administration or the Federal Housing Administration or the Department of Urban Development or other lenders generally recognized in the community as institutional lenders; or (v) such other Lenders as the Board shall hereafter designate as such in writing which have acquired a mortgage upon a Home; or (vi) any "Secondary Mortgage Market Institution", including Federal National Mortgage Association or the Federal Home Loan Mortgage Corporation, and such other Secondary Mortgage Market Institution as the Board shall hereafter designate as such in writing which has acquired a mortgage upon a Home; or (vii) Declarant, its successors and assigns; or (viii) Developer, its successors and assigns.

4.22. "Interest" means the maximum nonusurious interest rate allowed by law on the subject debt or obligation and, if no such rate is designated by law, then eighteen percent (18%) per annum.

4.23. "Legal Fees" mean: (i) reasonable fees for attorney and paralegal services incurred in negotiation and preparation for litigation, whether or not an action is actually begun, through and including all trial and appellate levels and post-judgment proceedings; and (ii) court costs through and including all trial and appellate levels and post-judgment proceedings.

4.24. "Limited Common Element" means those Common Elements which are reserved for the use of certain Homes to the exclusion of other Homes as more particularly described in Paragraph 6.2 hereof.

4.25. "Listed Mortgagee" means the holder, insurer, or guarantor of a mortgage encumbering a Home of which the Association has been notified pursuant to Paragraph 30.3 herein.

OR2801 PG0809

4.26. "Neighborhood Assessments" mean the assessments for which all Home Owners are obligated to the Association and include:

4.26.1. "Annual Assessment", which includes, but is not limited to, each Home Owner's annual share of funds required for the payment of Neighborhood Common Expenses as determined in accordance with this Declaration; and

4.26.2. "Special Assessments" which include any Neighborhood Assessments levied by the Board in addition to the Annual Assessment and are more particularly described in Paragraph 21.3 herein.

4.27. "Neighborhood Common Expenses" mean common expenses for which the Home Owners are liable to the Association as defined in the Act and as described in the Neighborhood Documents (as opposed to Common Expenses which are incurred by the Community Association pursuant to the Community Documents) and include:

4.27.1. The expenses for the operation, maintenance, repair or replacement of the Common Elements, costs of carrying out the powers and duties of the Association, cost of fire and extended coverage insurance; and

4.27.2. Any other expenses designated, not inconsistent with the Act, as Neighborhood Common Expenses from time to time by the Board.

4.28. "Neighborhood Documents" mean in the aggregate this Declaration, the Articles, Bylaws, any rules and regulations promulgated by the Association and all of the instruments and documents referred to therein and executed in connection with this Condominium and all amendments to the foregoing.

4.29. "Phase" or "Phases" mean that portion of the Land and improvements thereon, as contemplated by Section 718.403 of the Act, which may become part of the Condominium Property by recording this Declaration or an amendment hereto.

4.30. "Public Records" mean the Public Records of the County.

4.31. "Subsequent Phases" mean those portions of the Land and improvements thereon, which Developer may, but shall not be obligated to, submit to the Condominium Property, in whole or in part, and shall consist of Phases B through Z.

5. DESCRIPTION OF IMPROVEMENTS - INITIAL PHASE

5.1. Description of Improvements-Initial Phase

The portion of the Land and improvements (collectively "Initial Phase") being submitted to condominium ownership pursuant to this Declaration are described on the "Initial Phase Survey" (as hereinafter defined). The improvements in the Initial Phase include one (1) two (2)-story residential building ("Building") which contains six (6) Homes, each of which is designated

by a letter (representing the Phase) and a three digit number (e.g., "A-101") and is so referred to herein and in the Exhibits hereto. No Home bears the same designation as any other Home in the Condominium.

5.2. Initial Phase Survey

Annexed hereto as part of Exhibit B and made a part hereof is the Survey, Plot Plan and Graphic Description of Improvements for the Initial Phase which includes a survey of the land in the Initial Phase, a graphic description of the improvements in which the Home and the Common Elements are located and a plot plan thereof (all of which are herein collectively referred to as the "Initial Phase Survey"). The Initial Phase Survey shows and identifies thereon the Common Elements and every Home, its relative location and its approximate dimensions. There is attached to the Initial Phase Survey and made a part of this Declaration a certificate of a surveyor prepared, signed and conforming with the requirements of Section 718.104(4)(e) of the Act.

OR2801 PG0810

6. DESCRIPTION OF IMPROVEMENTS IN SUBSEQUENT PHASES

6.1. Subsequent Phases

6.1.1. Condominium Property. Developer is developing the Condominium Property as a phase condominium as provided for by Section 718.403 of the Act. In addition to the portion of the Land and improvements described on the Initial Phase Survey being submitted to condominium ownership pursuant to this Declaration, Developer contemplates that all or a portion of the Subsequent Phases may, by amendment or amendments hereto, be added to the Condominium Property as an additional Phase or additional Phases. If, as and when Subsequent Phases are added, the Condominium Property shall be enlarged and expanded so as to encompass and include the real property, the improvements thereon, and the easements and rights appurtenant thereto which are submitted to condominium ownership as parts of such Subsequent Phase or Phases.

6.1.2. Subsequent Phase Surveys. Annexed hereto as part of Exhibits B hereto are the surveys, plot plans and graphic descriptions of improvements for Phases B through Z ("Phase B Survey," "Phase C Survey," "Phase D Survey," etc.). Notwithstanding any indications to the contrary herein contained, Developer may make nonmaterial changes in the description(s) of any Subsequent Phase more particularly described on the Phase B Survey, Phase C Survey, Phase D Survey, etc. (collectively, the "Subsequent Phase Surveys").

6.1.3. Minimums and Maximums. While at the time of recordation of this Declaration Developer plans to include the number of Homes in each Subsequent Phase as set forth in the following chart, the Act requires that the Declaration also set forth the minimum and maximum number of Homes which Developer reserves the right to add in each Subsequent Phase, which information is set forth in the following chart:

PHASES	NUMBER OF RESIDENTIAL BUILDINGS	NUMBER OF HOMES		
		Minimum	Planned	Maximum
D	1	2	2	2
B, F, G, J, K, M-S, U, W, X, Y	16	4	4	5
A, C, E, H, I, L, T, V, Z	9	6	6	6

While Developer plans that the general size for each Home which is a downstairs end unit will be approximately one thousand six hundred thirty-two (1,632) air conditioned square feet (excluding the lanai and garage), the general size for each Home which is an upstairs end unit will be approximately two thousand and forty (2,040) air conditioned square feet (excluding the lanai and garage), the general size for each Home which is a downstairs center unit will be approximately one thousand five hundred seventy-four (1,574) air conditioned square feet (excluding the lanai and garage), and the general size for each Home which is an upstairs center unit will be approximately one thousand nine hundred thirty-one (1,931) air conditioned square feet (excluding the lanai and

garage), Developer reserves the right to include in the Condominium Homes ranging in size from a minimum of one thousand five hundred seventy-four (1,574) air conditioned square feet (excluding the lanai and garage), to a maximum of two thousand and forty (2,040) air conditioned square feet (excluding the lanai and garage). Square footage as used in this Paragraph was calculated from the center of the common wall to the outside of the exterior wall. However, please note that the common and exterior walls are portions of the Common Elements of the Condominium, rather than the Home itself.

6.1.4. Identification of Home. Each Home in any Subsequent Phase, if any such Subsequent Phase is submitted to the Condominium Property pursuant to the "Subsequent Phase Amendment" (as hereinafter defined), shall be identified by a letter (representing the Phase) and a three digit number (i.e., B-201 in Phase B). No Home in any Subsequent Phase which is added to the Condominium Property shall bear the same identifying number as any other Home in the Condominium.

OR2801 PG0811

6.1.5. Rights of Additional Owner. In the event that Developer does not complete its purchase of the remaining portions of the Land from Additional Owner in accordance with the Contract, Additional Owner shall have the right to develop such portions of the Land which it owns in any manner it determines, in its sole discretion. In the event that Additional Owner decides to continue with the development of the Land as a phase condominium and as part of the Condominium, such development shall comply with the provisions of this Declaration as recorded.

6.2. Limited Common Elements

6.2.1. Entrance Areas and Entrance Courts. Each area shown on the Initial Phase Survey or the Subsequent Phase Surveys as Entrance Area or Entrance Court shall be a Limited Common Element reserved for the exclusive use of the Home Owner(s) of the Home(s) adjacent thereto, which Entrance Areas and Entrance Courts shall be maintained by the Association.

6.2.2. A/C Land. The A/C Land in each Phase upon which is situated all air conditioning equipment located outside a Home, including the compressors located adjacent to the Building in which the Home is located and the coolant lines between such compressors and the Home, shall be a Limited Common Element for the exclusive use of the Home served thereby. The air conditioning equipment itself shall be owned, maintained, repaired and replaced by each Home Owner whose Home is served thereby.

6.2.3. Driveways. Each area shown on the Initial Phase Survey or the Subsequent Phase Surveys as Driveway which is limited to the amount of space required to park a vehicle shall be a Limited Common Element reserved for the exclusive use of the Home Owner of the Home adjacent thereto, which Driveway shall be maintained by the Association.

6.2.4 Garages. The garage, whether one-car or two-car, shown on the Initial Phase Survey or the Subsequent Phase Surveys for each Home shall be a Limited Common Element reserved for the exclusive use of the Home Owner of such Home. Developer reserves the right prior to construction of same to amend the plans for all garages, no matter how shown on the Initial Phase Survey or the Subsequent Phase surveys, from a side entry garage to a front entry garage, and vice versa, and from a one-car garage to a two-car garage, and vice versa. The Home Owner shall maintain the garage door and appurtenant equipment and the interior of the garage; the exterior of the garage shall be maintained by the Association.

6.4. Subsequent Phases Containing Four Homes

Each of Phases B, F, G, J, K, M, N, O, P, Q, R, S, U, W, X, and Y, if added to the Condominium Property pursuant to this Declaration by an amendment hereto, is intended to consist of the real property more particularly described in the Surveys attached hereto for each such Phase and made a part hereof, the improvements which are intended to include one (1) two (2)-story residential Building containing, in addition to the Common Elements therein, four (4) Homes, and the Common Elements shown on the applicable Survey. The Survey for a particular Phase (as

revised prior to the recordation of the Amendment adding such Phase) shall be attached to the Amendment adding such Phase. Developer shall provide no items of personal property for the Common Elements within such Phases. If such Phase is submitted to the Condominium Property pursuant to an Amendment, such Phase will be completed and the Amendment will be recorded amongst the Public Records no later than the later to occur of (i) seven (7) years from the date of recordation hereof or (ii) the maximum time allowed by law.

6.5. Subsequent Phases Containing Six Homes

Each of Phases C, E, H, I, L, T, V, and Z, if added to the Condominium Property pursuant to this Declaration by an amendment hereto, is intended to consist of the real property more particularly described in the Surveys attached hereto for each such Phase and made a part hereof, the improvements which are intended to include one (1) two (2)-story residential Building containing, in addition to the Common Elements therein, six (6) Homes, and the Common Elements shown on the applicable Survey. The Survey for a particular Phase (as revised prior to the recordation of the Amendment adding such Phase) shall be attached to the Amendment adding such Phase. Developer shall provide no items of personal property for the Common Elements within such Phases. If such Phase is submitted to the Condominium Property pursuant to an Amendment, such Phase will be completed and the Amendment will be recorded amongst the Public Records no later than the later to occur of (i) seven (7) years from the date of recordation hereof or (ii) the maximum time allowed by law.

OR2801 PG0812

6.6. Subsequent Phase Containing Two Homes

Phase D, if added to the Condominium Property pursuant to this Declaration by an amendment hereto, is intended to consist of the real property more particularly described in the Surveys attached hereto for such Phase and made a part hereof, the improvements which are intended to include one (1) two (2)-story residential Building containing, in addition to the Common Elements therein, two (2) Homes, and the Common Elements shown on the applicable Survey. The Survey for a such Phase (as revised prior to the recordation of the Amendment adding such Phase) shall be attached to the Amendment adding such Phase. Developer shall provide no items of personal property for the Common Elements within such Phase. If such Phase is submitted to the Condominium Property pursuant to an Amendment, such Phase will be completed and the Amendment will be recorded amongst the Public Records no later than the later to occur of (i) seven (7) years from the date of recordation hereof or (ii) the maximum time allowed by law.

6.7. Association Property

Tracts 1 through 10 are intended to consist of the real property and improvements therein more particularly designated on the Site Plan, attached as Exhibit E and made a part hereof ("Site Plan"). Tracts 2, 3, and 4 are not Common Elements, but are the initial Association Property. Tract 1 will be added to the Association Property within ninety (90) days after the receipt of a Certificate of Occupancy or its equivalent for the improvements comprising the Amenities Center. Tracts 5, 6, 7, 8, 9, and 10, as designated on the Site Plan, will be added to the Association Property in the event and to the extent that Developer completes its purchase of the remaining portions of the Land in accordance with the terms and provisions of the Contract.

The improvements are intended to include certain drives, parking areas, landscaped areas, storm water management system, and the Amenities Center within Bay Pointe at Bonita Bay. Tracts 2, 3, and 4, as designated on the Site Plan, (the initial Association Property) will be conveyed to the Association by quit-claim deed on or prior to the "Majority Election Date" (as defined in the Articles). In the event and to the extent that Developer closes on the purchase of the remaining portions of the Land, all of Tracts 5, 6, 7, 8, 9, and 10, as designated on the Site Plan, will be Association Property and will be conveyed to the Association by quit-claim deed on or prior to the Majority Election Date. The Association shall maintain, repair and operate the Association Property and the costs and expenses associated with such maintenance and repair shall be a Neighborhood Common Expense.

6.8. Changes in Subsequent Phases

Notwithstanding any indications to the contrary herein contained, descriptions relating to Phases or Exhibits referred to in this Article 6 or Articles 5 or 7 hereof, including, but not limited to, legal, graphic, numerical, narrative and the like, are approximations. To the fullest extent permitted by law, Developer reserves the right to change such descriptions as to a Phase by recording an amendment hereto until such time as Developer conveys a Home in such Phase to a Home Owner. Such an amendment shall not require the execution thereof by the Association, Institutional Mortgagees or any other person, persons or entity unless: (i) Developer changes the proportion by which a Home Owner, other than Developer, shares the Neighborhood Common Expenses and the Common Surplus or owns the Common Elements, in which event such Home Owner whose share of Common Elements, Neighborhood Common Expenses and Common Surplus is being so changed and the Institutional Mortgagees of record holding mortgages on the affected Home must consent in writing thereto; or (ii) such change materially and adversely affects a Home Owner as determined by Developer in the reasonable discretion of Developer, in which event such Home Owner and the Institutional Mortgagee of record holding the mortgage on the affected Home must consent thereto in writing or such amendment must be adopted in accordance with Article 28 hereof.

OR2801 PG0813

6.9. Addition of Subsequent Phases - No Prescribed Order

Notwithstanding the alphabetical sequence of the Subsequent Phases or any inference that can be drawn therefrom or from any other provision of the Neighborhood Documents, Developer reserves the right to submit Subsequent Phases to the Condominium Property in any sequence, provided, however, that there shall be submitted as a portion of the Common Elements, if necessary, an easement providing means of ingress and egress from and to any Subsequent Phase which is submitted to the Condominium Property to and from public ways, including dedicated streets.

7. PHASE DEVELOPMENT

7.1. Impact of Subsequent Phases on Initial Phase

7.1.1. Common Elements of Initial Phase. The Common Elements as shown on the Initial Phase Survey and included in the Initial Phase will be owned by all Home Owners in all Phases submitted to the condominium form of ownership as a portion of the Condominium Property pursuant to this Declaration and amendments hereto, if any.

7.1.2. Subsequent Phase Not Added. If any Subsequent Phase does not become part of the Condominium Property, no portion of such Subsequent Phase (including, but not limited to, the portion which would have constituted the Common Elements) shall become a part of the Condominium Property.

7.1.3. Common Elements of Subsequent Phases. If any Subsequent Phase is added to and does become a part of the Condominium Property, then all of the Common Elements constituting a portion of such Subsequent Phase shall become a part of the Common Elements of the Condominium Property, with such Common Elements being owned in undivided shares by all Home Owners in all Phases then and thereafter constituting a portion of the Condominium.

7.1.4. Share of Ownership Upon Submission of Only Initial Phase. If only the Initial Phase is submitted to the Condominium Property pursuant to this Declaration, there will be six (6) Homes in the Condominium, each having as an appurtenance thereto one (1) vote in the Association and an equal one-sixth (1/6) undivided share of ownership in the Common Elements.

7.1.5. Share of Ownership Upon Submission of Subsequent Phase. If any Subsequent Phase, in addition to the Initial Phase, is submitted to the Condominium Property, then each Home in all Phases submitted to the Condominium Property shall have as appurtenances thereto one (1) vote in the Association and an equal undivided share of ownership in the Common Elements based on the total number of Homes contained in the aggregate of all Phases submitted to

condominium ownership as a portion of the Condominium Property. If all Subsequent Phases are submitted, as planned, to condominium ownership as a portion of Condominium Property pursuant to an amendment or amendments to this Declaration, the total number of Homes shall be one hundred twenty (120); however, Developer has reserved the right to include a maximum of one hundred forty (140) Homes in the Condominium. The number of Homes planned to be included in each Subsequent Phase if, as and when added to the Condominium, is set forth in Paragraph 6.1.3 hereof.

7.2. Withdrawal Notice

Developer, in its absolute discretion, reserves the right to add or not to add any or all of the Subsequent Phases as part of the Condominium Property. Hence, notwithstanding anything contained in this Declaration to the contrary, no portion of any Subsequent Phase shall be affected or encumbered by this Declaration unless and until such Subsequent Phases are added to the Condominium Property by amendment to this Declaration recorded amongst the Public Records. Notwithstanding the fact that the foregoing portion of this Paragraph 7.2 is self-operative, if Developer determines not to add any or all Subsequent Phases to the Condominium Property, Developer may, in addition to any action otherwise required by the Act, record amongst the Public Records a notice ("Withdrawal Notice") to the effect that such Subsequent Phase or Subsequent Phases shall not be added to the Condominium Property. Further, should Developer record amongst the Public Records a Withdrawal Notice with respect to one (1) or more, but not all, of the Subsequent Phases, Developer shall retain the right to record additional Withdrawal Notices with respect to any or all of the Subsequent Phases, which were not submitted to the Condominium Property and are not covered by any prior Withdrawal Notice. Notwithstanding anything contained herein to the contrary, in the event Developer records amongst the Public Records one (1) or more Withdrawal Notices, then Developer shall have all rights permissible by law with respect to ownership of the Subsequent Phases covered by any and all such Withdrawal Notices, including, but not limited to, the right to develop such Subsequent Phase and/or Subsequent Phases as one (1) or more separate condominiums.

In the event and to the extent that Developer does not close on the purchase of the remaining portions of the Land in Unit Thirty-Seven from Additional Owner, Additional Owner shall have the right to file a Withdrawal Notice as to the portion not purchased. The Subsequent Phases consisting of such withdrawn lands will not be added to the Condominium. Such land shall not be submitted to the Condominium Property and Additional Owner shall have all rights permissible by law and the Community Declaration to develop such property, as it, in its sole discretion, deems appropriate. If the Additional Owner files a Withdrawal Notice as to all or any portion of Parcels 2 and 3, this Declaration shall in no manner whatsoever encumber or otherwise affect the withdrawn land, and this statement shall remain in effect notwithstanding any other provision of this Declaration (even if any other provision expressly or by implication purports to override this statement). This Paragraph of this Declaration may not be amended without Additional Owner's prior written consent.

8. UNDIVIDED SHARES IN COMMON ELEMENTS

8.1. Appurtenance

8.1.1. Ownership of the Common Elements and Membership in the Association. Each Home shall have as an appurtenance thereto one (1) vote in the Association and an equal undivided share of ownership in the Common Elements based on a fractional formula, the numerator of which shall be one (1) and the denominator of which at any time shall be the total number of Homes contained in the aggregate of all Phases submitted to condominium ownership as a portion of the Condominium Property at such time.

8.1.2. Right to Use Common Elements. Each Home shall have as an appurtenance thereto the right to use all of the Common Elements and Condominium Property of this Condominium in accordance with the Neighborhood Documents and subject to any limitations set forth in such Neighborhood Documents.

OR2801 PG0814

8.2. Share of Neighborhood Common Expenses and Common Surplus

The Neighborhood Common Expenses shall be shared and the Common Surplus shall be owned in proportion to each Home Owner's share of ownership of the Common Elements.

9. VOTING INTERESTS

9.1. Voting Interest

The Home Owner or Home Owners, collectively, of the fee simple title of record for each Home shall have the right to one (1) vote per Home ("Voting Interest") in the Association, regardless of the number of Phases which have been added to the Condominium Property or the number of Phases which have been created within Bay Pointe at Bonita Bay , as to the matters on which a vote by the Home Owners is taken as provided in the Neighborhood Documents and the Act.

OR2801 PG0815

9.2. Voting By Corporation or Multiple Home Owners

The Voting Interest of the Home Owners of any Home owned by more than one (1) person, a corporation or other entity, or by one (1) person and a corporation and/or other entity, or by any combination of the aforesaid, shall be cast by the person ("Voting Member") named in a proxy signed by all of the Home Owners of such Home or, if appropriate, by properly designated officers, principals or general partners of the respective legal entity which owns the Home and filed with the Secretary of the Association ("Voting Certificate"). In the alternative, a proxy as to a particular meeting may be executed in the same manner as the Voting Certificate. A proxy shall be effective only for the specific meeting for which originally given and any lawfully adjourned meetings thereof; provided, in no event shall any proxy be valid for a period longer than ninety (90) days unless a longer period may be specified by amendment to the Act, in which event such longer period shall apply. If neither a proxy nor a Voting Certificate is on file, the Voting Interest associated with a Home where the designation of a Voting Member or execution of a proxy is required shall not be considered in determining the requirement for a quorum or for any other purpose.

9.3. Ownership by Husband and Wife

Notwithstanding the provisions of Paragraph 9.2 above, whenever any Home is owned solely by a husband and wife they may, but shall not be required to, designate a Voting Member. In the event a Voting Certificate designating a Voting Member is not filed by the husband and wife, the following provisions shall govern their right to vote:

(i) Where both husband and wife are present at a meeting, each shall be regarded as the agent and proxy for the other for purposes of casting the Voting Interest for each Home owned solely by them. In the event they are unable to concur in their decision upon any subject requiring a vote, they shall lose their right to exercise their Voting Interest on that subject at that meeting.

(ii) Where only one (1) spouse is present at a meeting, the spouse present may exercise the Voting Interest of the Home without establishing the concurrence of the other spouse, absent any prior written notice to the contrary to the Association by the other spouse. In the event of prior written notice to the contrary to the Association by the other spouse, the vote of said Home shall not be considered in determining the requirement for a quorum or for any other purpose unless such prior notice to the contrary has been withdrawn by a subsequent written notice executed by both husband and wife.

(iii) Where neither spouse is present, the person designated in a proxy signed by either spouse may exercise the Voting Interest of the Home, absent any prior written notice to the contrary to the Association by the other spouse or the designation of a different proxy by the other spouse. In the event of prior

written notice to the contrary to the Association or the designation of a different proxy by the other spouse, the vote of said Home shall not be considered in determining the requirement for a quorum or for any other purpose.

9.4. Voting by Proxy

Except as specifically otherwise provided in the Act, Home Owners may vote by general proxy, or by limited proxies. Limited proxies and general proxies may be used to establish a quorum. Limited proxies and general proxies may also be used for voting on the matters outlined in Section 718.112(2)(b)(2) of the Act. To the extent permitted by law, a proxy, limited or general, may be used in the election of members of the Board.

9.5. Elections

The members of the Board shall be elected by written ballot or voting machine in accordance with the provisions of Section 718.112(2)(d)(3) of the Act.

OR2801 PG0816

10. PLAN FOR DEVELOPMENT

10.1. Developer is the developer of Bay Pointe at Bonita Bay in Bonita Bay located in Bonita Springs in the County. Declarant, and not Developer, is the developer of Bonita Bay. The Community Declaration sets forth Declarant's plan for development of Bonita Bay. Declarant plans to develop Bonita Bay as a multi-phase planned community comprising residential, institutional and commercial property in accordance with the Community Declaration. Certain developments such as single family, condominium or commercial may be grouped together as a Neighborhood.

10.2. Declarant has reserved the right in Paragraph 3.04 of the Community Declaration to establish a uniform community development district pursuant to Florida Statutes Chapter 190 to administer all or a portion of Bonita Bay.

10.3. The Community Association is responsible for the maintenance of the "Common Area" (as described in the Community Declaration). Portions of Bonita Bay may be developed around and in conjunction with recreation-type clubs. These clubs may be public, private, equity or non-equity which may own and operate tennis, golf, swimming and social functions. The ownership of a Home does not confer any use rights to the facilities or membership in a club. Bay Pointe at Bonita Bay is one of the Neighborhoods in Bonita Bay as more particularly described in the Community Declaration.

10.4. Declarant has recorded the Declaration Amendment which commits the Land to the terms and provisions of the Community Declaration. The Unit Thirty-Seven Declaration sets forth additional restrictions pertaining to Parcel 1 and the Amenities Center. The Initial Phase and the Amenities Center are included within Parcel 1. The Amenities Center is Tract 1 as set forth on the Site Plan attached hereto as Exhibit E.

10.5. Declarant has entered into an Easement Agreement with the Community Association recorded in Official Records Book 2713, Page 3325, of the Public Records of the County. This Easement Agreement provides for access easements, lake maintenance, drainage and related easements, and wetland reserve access and maintenance easements and landscape easements.

11. ASSOCIATION

11.1. Purpose of Association

The Association shall be the condominium association responsible for the operation of this Condominium and, subject to the other provisions hereof, certain other condominiums created within Bay Pointe at Bonita Bay. Each Home Owner shall be a member of the Association as provided in the Neighborhood Documents. A copy of the Articles are attached hereto as Exhibit C

and made a part hereof. A copy of the Bylaws are attached hereto as Exhibit D and made a part hereof.

11.2. Member Approval of Certain Association Actions

Notwithstanding anything contained herein to the contrary, the Association shall be required to obtain the approval of three-fourths (3/4) of all Home Owners (at a duly called meeting of the Home Owners at which a quorum is present) prior to the payment of or contracting for legal or other fees or expenses to persons or entities engaged by the Association in contemplation of a lawsuit or for the purpose of suing, or making, preparing or investigating any lawsuit, or commencing any lawsuit other than for the following purposes:

(i) the collection of Neighborhood Assessments;

(ii) the collection of other charges which Home Owners are obligated to pay pursuant to the Neighborhood Documents;

(iii) the enforcement of the use and occupancy restrictions contained in the Neighborhood Documents;

(iv) the enforcement of the restrictions of the sale and other transfer of Homes contained in the Neighborhood Documents;

(v) in an emergency where waiting to obtain the approval of the Home Owners creates a substantial risk of irreparable injury to the Condominium Property or the Home Owners but in such event, the aforesaid vote shall be taken with respect to the continuation of the action at the earliest practical date (the imminent expiration of a statute of limitations shall not be deemed an emergency obviating the need for the requisite vote of three-fourths [3/4] of the Home Owners); or

(vi) filing a compulsory counterclaim.

11.3. Acquisition of Property

The Association has the power to acquire title to property or otherwise hold, convey, lease and mortgage association property for the use and benefit of the Members. The purchase and conveyance of real property must be approved by the affirmative vote of sixty percent (60%) of all Home Owners (at a duly called meeting of the Home Owners at which a quorum is present.)

The Association shall have the right to make or cause to be made structural changes and improvements ("Alterations") of the Common Elements and Limited Common Elements and Association Property which are approved by the Board and which do not prejudice the right of any Home Owner or Institutional Mortgagee. In the event such changes or improvements prejudice the rights of a Home Owner or Institutional Mortgagee, the consent of such Home Owner or Institutional Mortgagee so prejudiced shall be required before such alterations can be made or caused. If the cost of the Alternations exceed Twenty-Five Thousand Dollars ($25,000), the affirmative vote of sixty percent (60%) of the Home Owners, in accordance with the Neighborhood Documents, shall be required in addition to such Board approval, and the cost of such Alterations shall be assessed against the Home Owners in the manner provided in the Neighborhood Documents.

11.4. Conveyance to Association

The Association is obligated to accept any and all conveyances to it by Developer or the Community Association of a fee simple title, easements or leases to all or portions of their property.

OR2801 PG0817

11.5. Conveyance by Association

The Association is empowered to delegate any of its functions or convey any of its property to any governmental unit as may be required or deemed necessary from time to time.

11.6. Community Association

The Home Owners shall be "Members" of the Community Association as described in the Articles of Incorporation of the Community Association. The President of the Association shall be the "Voting Member" and cast the votes for the Home Owners with respect to all Community Association matters requiring a membership vote of the Community Association pursuant to the By-Laws of the Community Association and the Bylaws of the Association. The Community Association has been organized for the purpose of administering the covenants and obligations relating to the "Common Area" and Community Association property in Bonita Bay as set forth in the Community Declaration. All members of the Association acquire the benefits as to use of the Common Area as described in the Community Declaration and the obligation to pay the "Common Expenses" as set forth in the Community Declaration.

OR2601 PG0818

12. EASEMENTS

12.1. Perpetual Nonexclusive Easement to Public Ways, the Condominium Property, the Common Areas and the Amenities Center

The walks and other rights-of-way, if any, in this Condominium as shown on the Site Plan or hereafter located within this Condominium shall be, and the same are hereby declared to be, subject to a perpetual nonexclusive easement for ingress and egress and access to, over and across the same, to public ways, including dedicated streets, the Condominium Property, the Common Areas and the Amenities Center, which easement is hereby created in favor of all the Home Owners in the Condominium now or hereafter existing for their use and for the use of their family members, guests, lessees or invitees for all proper and normal purposes and for the furnishing of services and facilities for which the same are reasonably intended, including ingress and egress for the furnishing of services by fire protection agencies, police and other authorities of the law, United States mail carriers, representatives of public utilities, including, but not limited to, telephone, electric power, telephone, sewer, water, gas, drainage, irrigation, lighting, television transmission, cable television and communications systems transmission, reception and monitoring, security, garbage and waste removal and the like and for all purposes incidental thereto and other utilities or services authorized by Developer, its successors or assigns to service Condominium Property; and such other persons as Developer from time to time may designate for performing their authorized services. Developer hereby reserves unto itself, its successors, assigns, designees and nominees, and hereby grants to the Association, the right to grant easements, permits and licenses over the Common Elements and to impose upon the Common Elements henceforth and from time to time such easements and cross-easements for any of the foregoing purposes as it deems to be in the best interests of and necessary and proper for the Condominium. The Association shall have the right to establish the rules and regulations governing the use and enjoyment of the Common Elements and all easements over and upon same.

12.2. Easements and Cross-Easements on Common Elements

Inasmuch as the Condominium constitutes a part of Bonita Bay, Developer hereby declares that the Common Elements of the Condominium are an Neighborhood Common Area to the Condominium and that shall be and the same are hereby duly declared to be subject to perpetual nonexclusive easements in favor of the Association, and such appropriate utility, telecommunication and other service companies or the providers of the services hereinafter set forth as may be from time to time designated by Developer or Declarant, as applicable, to and from all portions of Bonita Bay for ingress and egress, and for the installation, maintenance, construction and repair of facilities, including, but not limited to, electric power, telephone, sewer, water, gas, drainage, irrigation, lighting, television transmission, cable television and communications systems transmission, reception and monitoring, security, pest control, garbage and waste removal and the like and for all

purposes incidental thereto. Developer hereby reserves unto itself, its successors, assigns, designees and nominees, and hereby grants to the Association, the right to grant easements, permits and licenses over the Common Elements and to impose upon the Common Elements henceforth and from time to time such easements and cross-easements for any of the foregoing purposes as it deems to be in the best interests of and necessary and proper for the Condominium. Developer hereby reserves a blanket easement over, under, upon and through the Condominium for any purpose whatsoever.

12.3. Association Property

Developer reserves the right for itself to grant such easements over, under, in and upon the Association Property, which includes all of Tracts 1 through 10, as depicted on the Site Plan, in the event that Developer closes its purchase on the remaining portion of Unit Thirty-Seven in accordance with the Contract, in favor of itself, the Association, its designees and appropriate utility and other service corporations or companies for ingress and egress for persons and vehicles and to provide power, electric, sewer, water and other utility services and lighting facilities, irrigation, television transmission and distribution facilities, cable television facilities, telecommunications, security service and facilities in connection therewith, pest control, and access to publicly dedicated streets, and the like. In addition, upon the conveyance of the Association Property to the Association, Developer shall be deemed to have thereby granted to the Association the right to grant such easements over, under, in and upon the Association Property in favor of Developer, the Association, its designees, and others and appropriate utility and other service corporations or companies for the above-stated purposes. Either Developer or the Association shall execute, deliver and impose, from time to time, such easements and cross-easements for any of the foregoing purposes and at such location or locations as determined by either Developer or the Association. In the event that Developer does not close on its purchase of the remaining portions of the Land, the Association Property shall consist of Tracts 1 through 4, as depicted on the Site Plan.

OR2801 PG0819

12.4. Easement for Encroachments

12.4.1. Settlement or Movement of Improvements. All the Condominium Property shall be subject to easements for encroachments, which now or hereafter exist, caused by settlement or movement of any improvements upon such areas or improvements contiguous thereto or caused by minor inaccuracies in the building or rebuilding of such improvements.

12.4.2. Air Space. Subject to Paragraph 7.2, all the Land and improvements thereon, including, but not limited to, the Condominium Property, shall be subject to perpetual easements for encroachments, for so long as such encroachment exists, in favor of each Home and the Home Owners thereof, their family members, guests, invitees and lessees for air space for any balcony or terrace of any Home, and the reasonable use, maintenance and repair of same, which extends under, over or through any of the Land and improvements thereon, including, but not limited to, the Condominium Property, including, but not limited to, Common Elements. Such easements shall be appurtenances to and a covenant running with the respective Home in whose favor such easements exist.

12.4.3. Term of Encroachment Easements. The above easements for encroachments shall continue until such encroachments no longer exist.

12.5 Reservation for Periodic Inspections

Developer shall have the right, but not the obligation, to conduct inspections of and tests on, from time to time, all or any parts of the Common Elements and improvements thereon in order to ascertain the physical condition of the Common Elements and improvements thereon and to determine whether maintenance, repair or replacement of the Common Elements or improvements thereon is indicated. If Developer conducts any such tests or inspections, it shall pay all costs thereof, restore the affected portion of the Condominium Property to its condition immediately prior to the inspections and tests, and shall indemnify the Association and the Owner(s) of any affected

Home(s) from any damages resulting therefrom. Developer hereby reserves the right of entry on, over, under, across and through the Condominium Property as may be reasonably necessary for the foregoing purposes.

13. LIABILITY INSURANCE PROVISIONS

13.1. Public Liability Insurance

The Board shall obtain liability insurance in the form generally known as Public Liability and/or Owners, Landlord and Tenant Policies, or alternatively, in the event Developer so elects, the Association shall be covered under Developer's insurance, in such amounts as it may determine from time to time for the purpose of providing liability insurance coverage for all property and improvements in Bay Pointe at Bonita Bay excluding the Homes; provided, however, that such policy or policies shall not have limits of less than One Million Dollars ($1,000,000) covering all claims for personal injury and One Hundred Thousand Dollars ($100,000) for property damage arising out of a single occurrence. The Board shall collect and enforce the payment of a share of the premium for such insurance from each Home Owner as a part of the Annual Assessment. Said insurance shall include, but not be limited to, legal liability for property damage, bodily injuries and deaths of persons in connection with the operation, maintenance or use of any property or improvements within Bay Pointe at Bonita Bay , legal liability arising out of law suits related to employment contracts of the Association, water damage, liability for hazards related to usage and liability for property of others, hired automobile, non-owned automobile and off-premises employee coverage and such other risks as are customarily covered with respect to developments similar to Bay Pointe at Bonita Bay in construction, location and use. All such policies shall name the Association (and Developer so long as Developer shall own any of the Condominium Property, as their respective interests may appear) as the insured(s) under such policy or policies. The original or a true copy of each policy shall be held in the office of the Association. The insurance purchased shall contain a "severability of interest endorsement," and waiver of subrogation or equivalent coverage, which would preclude the insuror from denying the claim of a Home Owner because of the negligent acts of either the Association, Developer or any other Home Owner or deny the claim of either Developer or the Association because of the negligent acts of the other or the negligent acts of a Home Owner. All liability insurance shall contain cross liability endorsements to cover liabilities of the Home Owners as a group to a Home Owner. Each Home Owner shall be responsible for the purchasing of liability insurance for accidents occurring in his or her own Home and, if the Home Owner so determines, for supplementing any insurance purchased by the Association. Notwithstanding the foregoing, in the event the Board determines that the cost of public liability insurance is economically unwarranted, the Board may determine to either reduce the amount of such insurance, increase the deductible amount or discontinue coverage.

13.2. Fidelity Insurance

Adequate fidelity coverage to protect against dishonest acts of the officers and employees of the Association and the Directors and all others who handle and are responsible for handling funds of the Association (whether or not they receive compensation), shall be maintained. Such coverage shall be in the form of fidelity bonds which meet the following requirements: (i) such bonds shall name the Association as an obligee and premiums therefor shall be paid by the Association; (ii) such bonds shall be written in such amounts as set forth in Section 718.112(2)(j) (in the event that the Act does not specify an amount then the bonds shall be written in an amount equal to at least three (3) months aggregate assessments for all Homes plus reserve funds); and (iii) such bonds shall contain waivers of any defense based upon the exclusion of persons who serve without compensation from any definition of "employee" or similar expression. Notwithstanding the foregoing, in the event the Association determines that the insurance is not obtainable, the Association may determine to either reduce the amount of such insurance, increase the deductible amount or discontinue coverage provided coverage is no less than required by the Act.

OR2801 PG0820

13.3. Cancellation Provision

All insurance policies or fidelity bonds purchased pursuant to this Article 13 shall provide that they may not be canceled without at least ten (10) days prior written notice to the Association and to Listed Mortgagees.

14. PROVISIONS RELATING TO CASUALTY INSURANCE AND DESTRUCTION OF IMPROVEMENTS

14.1. Hazard Insurance

Each Home Owner shall be responsible for the purchase of casualty insurance for all of his or her personal property including the following equipment, if any, located within his or her Home, electrical fixtures, appliances, air conditioning or heating equipment, water heaters and built-in cabinets. The Association shall obtain casualty insurance with such coverage and in such amounts as it may determine from time to time for the purpose of providing casualty insurance coverage for all insurable property and improvements within Bay Pointe at Bonita Bay , including Fire and Extended Coverage, Vandalism and Malicious Mischief Insurance, all of which insurance shall insure all of the insurable improvements on or within Bay Pointe at Bonita Bay , including personal property owned by the Association, in and for the interest of the Association, all Home Owners and their mortgagees, as their interests may appear, with a company (or companies) acceptable to the standards set by the Board. The Association shall purchase insurance for each Building now located or which may hereafter be located, built or placed within Bay Pointe at Bonita Bay in an amount equal to one hundred percent (100%) of the "Replacement Value" thereof. The term "Building" as used in this Article 14 does not include Home floor coverings, wall coverings or ceiling coverings. The term "Replacement Value" shall mean one hundred percent (100%) of the current replacement costs exclusive of land, foundation, excavation, items of personal property and other items normally excluded from coverage as determined annually by the Board. The Board may determine the kind of coverage and proper and adequate amount of insurance. The casualty insurance shall contain an "agreed amount endorsement" or its equivalent, "inflation guard endorsement," and, if determined necessary, an "increased cost of construction endorsement" or "contingent liability from operation of building laws endorsement" or a "demolition endorsement" or the equivalent. The casualty insurance shall insure the Buildings from loss or damage caused by or resulting from at least the following: fire and other hazards covered by the standard extended coverage endorsement and by sprinkler leakage, windstorm, vandalism, malicious mischief, debris removal and demolition, and such other risks as shall customarily be covered with respect to projects or developments similar to the Buildings in construction, location and use.

14.2. Flood Insurance

If determined appropriate by the Board or if required by any Institutional Mortgagee, the Association shall obtain a master or blanket policy of flood insurance covering all property and improvements in Bay Pointe at Bonita Bay , if available, under the National Flood Insurance Program, which flood insurance shall be in the form of a standard policy issued by a member of the National Flood Insurers Association, and the amount of the coverage of such insurance shall be the lesser of the maximum amount of flood insurance available under such program or one hundred percent (100%) of the current replacement cost of all buildings and other insurable property located in the flood hazard area.

14.3. Form of Policy and Insurance Trustee

The Association may, to the extent possible and not inconsistent with the foregoing, obtain one (1) policy to insure all of the insurable improvements within Bay Pointe at Bonita Bay operated by the Association. The premiums for such coverage and other expenses in connection with said insurance shall be paid by the Association and assessed as part of the Annual Assessment. The company (or companies) with which the Association shall place its insurance coverage, as provided in this Declaration, must be a good and responsible company (or companies) authorized to do business in the State of Florida. In addition, the insurance agent must be located in the State

OR2801 PG0821

of Florida. The Association shall have the right to designate a trustee ("Insurance Trustee") and upon the request of the Institutional Mortgagee holding the highest dollar indebtedness encumbering Homes within Bay Pointe at Bonita Bay ("Lead Mortgagee") shall designate an Insurance Trustee. Thereafter the Association from time to time shall have the right to change the Insurance Trustee to such other trust company authorized to conduct business in the State of Florida or to such other person, firm or corporation as Insurance Trustee as shall be acceptable to the Board and the Lead Mortgagee. The Lead Mortgagee shall have the right, for so long as it holds the highest dollar indebtedness encumbering Homes within Bay Pointe at Bonita Bay to approve: (i) the form of the insurance policies; (ii) the amounts thereof; (iii) the company or companies which shall be the insurers under such policies; (iv) the insurance agent or agents; and (v) the designation of the Insurance Trustee if it deems the use of an Insurance Trustee other than the Board to be necessary, which approval(s) shall not be unreasonably withheld or delayed; provided, however, for so long as Developer owns any Home(s), Developer shall have the right, but not the obligation, to require the Association to designate an Insurance Trustee other than the Board. Notwithstanding anything in this Declaration to the contrary, the Board may act as the Insurance Trustee hereunder unless otherwise required by the Lead Mortgagee or Developer. The Lead Mortgagee shall inform the Association by written notification if it requires the use of an Insurance Trustee other than the Board. If the use of an Insurance Trustee other than the Board is requested in writing, then the Lead Mortgagee shall be deemed to have approved the Insurance Trustee unless the Lead Mortgagee's written disapproval is received by the Association within thirty (30) days after notice from the Association of the identity of the proposed Insurance Trustee. If no Insurance Trustee is required, the Board shall receive, hold and expend insurance proceeds in the manner hereinafter provided as if it were the Insurance Trustee.

OR2801 PG0822

14.4. Required Policy Provisions

All such aforesaid policies shall provide that they may not be canceled without at least ten (10) days' prior written notice to the Association and Listed Mortgagees and shall be deposited with the Insurance Trustee upon its written acknowledgment that the policies and any proceeds thereof will be held in accordance with the terms hereof. Said policies shall provide that all insurance proceeds payable on account of loss or damage shall be payable to the Insurance Trustee. In the event of a casualty loss, the Insurance Trustee may deduct from the insurance proceeds collected a reasonable fee for its service as Insurance Trustee. The Association is hereby irrevocably appointed agent for each Home Owner to adjust all claims arising under insurance policies purchased by the Association. The Insurance Trustee shall not be liable for payment of premiums, for the renewal or the sufficiency of the policies nor for the failure to collect any insurance proceeds. The Association may determine to act as Insurance Trustee, in which event references herein to Insurance Trustee shall refer to the Board.

14.5. Restrictions of Mortgagees

No mortgagee shall have any right to participate in the determination of whether property is to be rebuilt, nor shall any mortgagee have the right to apply insurance proceeds to repayment of its loan unless such proceeds are distributed to Home Owners and/or their respective mortgagees.

14.6. Distribution of Insurance Proceeds and Losses

The duty of the Insurance Trustee shall be to receive any and all proceeds from the insurance policies held by it and to hold such proceeds in trust for the Association, Home Owners and mortgagees under the following terms:

14.6.1. Loss to Home Alone. In the event a loss, insured under the policies held by the Insurance Trustee, occurs to any improvements within any of the Homes alone, without any loss to any other improvements within Bay Pointe at Bonita Bay , the Insurance Trustee shall immediately pay all proceeds received because of such loss directly to the Home Owners of the Homes damaged and their mortgagees, if any, as their interests may appear, and it shall be the duty of these Home Owners to use such proceeds to effect necessary repair to the Homes. The Insurance

Trustee, where other than the Association, may rely upon the written statement of the Association as to whether or not there has been a loss to the Homes alone, the Common Elements or any combination thereof.

14.6.2. Loss of Fifty Thousand Dollars ($50,000) or Less to Homes and Common Elements. In the event that a loss of Fifty Thousand Dollars ($50,000) or less occurs to improvements within one (1) or more Homes and to improvements within Common Elements contiguous thereto, or to improvements within the Common Elements, the Insurance Trustee shall pay the proceeds received as a result of such loss to the Association. Upon receipt of such proceeds, the Association will cause the necessary repairs to be made to the improvements within the Common Elements and within the damaged Homes. In such event, should the insurance proceeds be sufficient to repair the improvements within the Common Elements but insufficient to repair all of the damage within the Homes, the proceeds shall be applied first to completely repair the improvements within the Common Elements and the balance of the funds ("Balance") shall be apportioned by the Association to repair the damage to the improvements within Homes, which apportionment shall be made to each Home in accordance with the proportion of damage sustained to improvements within said Homes as estimated by the insurance company whose policy covers such damage. Any deficiency between the Balance apportioned to a damaged Home and the cost of repair shall be paid by a Special Assessment.

OR2801 PG0823

14.6.3. Loss in Excess of Fifty Thousand Dollars ($50,000) to Homes and Common Elements. In the event the Insurance Trustee receives proceeds in excess of the sum of Fifty Thousand Dollars ($50,000) as a result of damages to the improvements within the Common Elements and/or Homes and Common Elements that are contiguous, then the Insurance Trustee shall hold, in trust, all insurance proceeds received with respect to such damage, together with any and all other funds paid as hereinafter provided, and shall distribute the same as follows:

(a) The Board shall obtain or cause to be obtained reliable and detailed estimates and/or bids for the cost of rebuilding and reconstructing the damage and for the purpose of determining whether insurance proceeds are sufficient to pay for the same.

(b) In the event the insurance proceeds are sufficient to rebuild and reconstruct all the damaged improvements, or upon the collection of the necessary funds that are described in subparagraph 14.6.3 (c) below, then the damaged improvements shall be completely repaired and restored. In this event, all payees shall deliver paid bills and waivers of mechanics' liens to the Insurance Trustee and execute affidavits required by law, by the Association, by any Institutional Mortgagee named on a mortgage endorsement or by the Insurance Trustee, and shall deliver the same to the Insurance Trustee. Further, the Association shall negotiate and obtain a contractor willing to do the work on a fixed price basis or some other reasonable terms under the circumstances, which said contractor shall post a performance and payment bond, and the Insurance Trustee shall disburse the insurance proceeds and other funds held in trust in accordance with the progress payments contained in the construction contract between the Association and the contractor. Subject to the foregoing, the Board shall have the right and obligation to negotiate and contract for the repair and restoration of the premises.

(c) In the event the insurance proceeds are insufficient to repair and replace all of the damaged improvements within the Common Elements and Homes contiguous to such damaged Common Elements, the Board shall hold a special meeting to determine a Special Assessment against all of the Home Owners to obtain any necessary funds to repair and to restore such damaged improvements. Upon the determination by the Board of the amount of such Special Assessment, the Board shall immediately levy such Special Assessment against the Homes setting forth the date or dates of payment of the same, and any and all funds received from the Home Owners pursuant to such Special Assessment shall be delivered to the Insurance Trustee and disbursed as provided in subparagraph 14.6.3 (b) immediately preceding. In the event the deficiency between the estimated cost of the repair and replacement of the damaged property and the insurance proceeds exceeds the sum of Twenty-Five Thousand Dollars ($25,000), and three-fourths (3/4) of the Home Owners advise the Board in writing on or before the date for the first payment thereof that they are opposed to a Special Assessment, then the Insurance Trustee shall divide the net insurance

proceeds into the shares described in Article 7 hereof and shall promptly pay each share of such proceeds to the Home Owners and mortgagees of record as their interests may appear ("Insurance Proceeds Distribution"). In making any such Insurance Proceeds Distribution to the Home Owners and mortgagees, the Insurance Trustee may rely upon a certificate of an abstract company as to the names of the then Home Owners and their respective mortgagees. Any Insurance Proceeds Distribution shall also require the approval of the Lead Mortgagee.

14.6.4. Distribution of Excess Funds. In the event that after the completion of and payment for the repair and reconstruction of the damage to the damaged property and after the payment of the Insurance Trustee's fee with respect thereto any excess insurance proceeds remain in the hands of the Insurance Trustee, then such excess shall be disbursed in the manner of the Insurance Proceeds Distribution. However, in the event such repairs and replacements were paid for by any Special Assessment as well as insurance proceeds, then it shall be presumed that the monies disbursed in payment of any repair, replacement and reconstruction were first disbursed from insurance proceeds and any remaining funds held by the Insurance Trustee shall be distributed to the Home Owners in proportion to their contributions by way of Special Assessment.

OR2801 PG0824

14.6.5. Institutional Mortgagees. In the event the Insurance Trustee has on hand, within ninety (90) days after any casualty or loss, insurance proceeds and, if necessary, funds from any Special Assessment sufficient to pay fully any required restoration and repair with respect to such casualty or loss, then no mortgagee shall have the right to require the application of any insurance proceeds or Special Assessment to the payment of its loan. Any provision contained herein for the benefit of any mortgagee may be enforced by a mortgagee.

14.6.6. Repair of Damaged Property. Any repair, rebuilding or reconstruction of damaged property shall be substantially in accordance with the architectural plans and specifications for Bay Pointe at Bonita Bay , as: (i) originally constructed; (ii) reconstructed; or (iii) new plans and specifications approved by Declarant in accordance with the Community Declaration; provided, however, any material or substantial change in new plans and specifications approved by Declarant from the plans and specifications of Bay Pointe at Bonita Bay as previously constructed shall require approval by the Lead Mortgagee.

14.6.7. Determination of Damage. The Board shall determine, in its sole and absolute discretion, whether damage or loss has occurred to improvements within Homes alone, Common Elements alone or to improvements within any combination thereof.

14.6.8. Insurance Amounts. Notwithstanding anything in this Article 14 to the contrary, the amounts set forth for the purchase of insurance in this Article 14 are the minimum amounts to be purchased. Therefore, Home Owners or the Association, as the case may be, may purchase insurance in excess of the amounts set forth herein. The amounts set forth do not constitute a representation or warranty of any kind by Developer or the Association as to the proper amount or kinds of insurance required.

14.6.9. Miscellaneous Policy Requirements. Policies insuring the property within Bay Pointe at Bonita Bay purchased pursuant to the requirements of this Article 14 shall provide that any insurance trust agreement shall be recognized; the right of subrogation against Home Owners will be waived; the insurance will not be prejudiced by any acts or omission of individual Home Owners who are not under the control of the Association; and the policy will be primary, even if a Home Owner has other insurance that covers the same loss.

14.6.10. Master Form of Insurance. Nothing contained herein shall prohibit the Association from obtaining a "Master" or "Blanket" form of insurance to meet the requirements of this Article 14, provided that the coverages required hereunder are fulfilled.

15. PROVISIONS RELATING TO CONDEMNATION OR EMINENT DOMAIN PROCEEDINGS

15.1. Proceedings

The Association shall represent the Home Owners in the condemnation proceedings or in negotiations, settlements and agreements with the condemning authority for acquisition of the Common Elements or any parts thereof by the condemning authority.

15.2. Deposit of Awards With Insurance Trustee

The taking of any portion of the Condominium Property by condemnation shall be deemed to be a casualty, and the awards for that taking shall be deemed to be proceeds from insurance on account of the casualty and shall be deposited with the Insurance Trustee. Although the awards may be payable to Home Owners, the Home Owners shall deposit the awards with the Insurance Trustee; and in the event of failure to do so, in the discretion of the Board, a special charge shall be made against a defaulting Home Owner in the amount of his or her award, or the amount of that award shall be set off against the sums hereafter made payable to that Home Owner.

OR2801 PG0825

15.3. Disbursement of Funds

If the Condominium is terminated in accordance with the provisions of this Declaration after condemnation, the proceeds of the awards and Special Assessments, if any, shall be deemed to be Condominium Property and shall be divided into the shares described in the Declaration and distributed to the Home Owners and mortgagees as their interests may appear. If the Condominium is not terminated after condemnation, the size of the Condominium will be reduced, the owners of the condemned Homes will be made whole and the Condominium Property damaged by the taking will be made usable in the manner provided below.

15.4. Home Reduced But Tenantable

If the taking reduces the size of a Home ("Affected Home") and the remaining portion of the Affected Home can be made tenantable, the award for the taking of a portion of the Affected Home shall be used for the following purposes in the order stated and the following changes shall be effected in the Condominium:

15.4.1. Affected Home Made Tenantable. The Affected Home shall be made tenantable. If the cost of the restoration exceeds the amount of the award, the additional funds required shall be collected as a special charge.

15.4.2. Excess Distributed to Home Owner and Institutional Mortgagee. The balance of the award, if any, shall be distributed to the Home Owner of the Affected Home and to each Institutional Mortgagee of the Affected Home, the remittance being made payable to the Home Owner and Institutional Mortgagees as their interests may appear.

15.4.3. Reduction in Percentage of Common Elements. If the floor area of the Affected Home is reduced by more than ten percent (10%) by the taking, the number representing the share in the ownership of the Common Elements appurtenant to the Affected Home shall be reduced ("Reduction in Percentage of Common Elements") in the proportion by which the floor area of the Affected Home is reduced by the taking, and then the shares of all Homes in the ownership of the Common Elements shall be restated with the Reduction in Percentage of Common Elements being allocated to all the Homes in proportion to their share of ownership in the Common Elements.

15.5. Affected Home Made Untenantable

If the taking is of the entire Affected Home or so reduces the size of an Affected Home that it cannot be made tenantable, the award for the taking of the Affected Home shall be used

for the following purposes in the order stated and the following changes shall be effected in the Condominium:

15.5.1. Payment to Home Owner and Institutional Mortgagee. The market value of the Affected Home immediately prior to the taking shall be paid to the Home Owner thereof and to each Institutional Mortgagee thereof as their interests may appear.

15.5.2. Remaining Portion of Affected Home. The remaining portion of the Affected Home, if any, shall be released by the Institutional Mortgagee and conveyed by the Home Owner to the Association. Such remaining portion of the Affected Home shall become a part of the Common Elements and shall be placed in a condition approved by the Board and the Neighborhood Documents shall be amended to reflect the addition of such Common Elements; provided that if the cost of the work shall exceed the balance of the fund from the award for the taking after the payment set forth in subparagraph 15.4.1 above, the work shall be approved in the manner required for further improvement of the Common Elements.

15.5.3. Adjustment in Shares of Common Elements. The shares in the Common Elements appurtenant to the Homes that continue as part of the Condominium shall be adjusted to distribute the ownership of the Common Elements from the Affected Homes among the reduced number of Homes. The shares of the continuing Homes in the ownership of the Common Elements shall be restated with the percentage of ownership in the Common Elements of the Affected Home being allocated to all the continuing Homes in proportion to their relative share of ownership in the Common Elements.

15.5.4. Insufficient Award. If the amount of the award for the taking is not sufficient to pay the market value of the Affected Home to the Home Owner and to condition the remaining portion of the Affected Home for use as a part of the Common Elements, the additional funds required for those purposes shall be raised by Special Assessments against all of the Home Owners who will continue as Home Owners after the changes in the Condominium effected by the taking. The Neighborhood Assessments shall be made in proportion to the shares of those Home Owners in the Common Elements after the changes effected by the taking.

15.5.5. Determination of Market Value of Affected Home. If the market value of an Affected Home prior to the taking cannot be determined by agreement between the Home Owner, the Institutional Mortgagees of the Affected Home and the Association within thirty (30) days after notice by either party, the value shall be determined by arbitration in accordance with the then existing rules of the American Arbitration Association, except that the arbitrators shall be two appraisers appointed by the American Arbitration Association who shall base their determination upon an average of their appraisals of the Affected Home; and the determination of the arbitrators shall be conclusive upon the parties and judgment upon the same may be entered in any court having jurisdiction thereof. The cost of arbitration proceedings shall be assessed against all Homes in proportion to the shares of the Homes in the Common Elements as they exist prior to the changes effected by the taking.

15.6. Taking of Common Elements

Awards for taking of Common Elements shall be used to make the remaining portion of the Common Elements usable in the manner approved by the Board; provided, that if the cost of the work shall exceed the balance of the funds from the awards for the taking, the work shall be approved in the manner required for further improvement of the Common Elements. The balance of the awards for the taking of Common Elements, if any, shall be distributed to the Home Owners in the shares in which they own the Common Elements after adjustment of these shares on account of the condemnation and to Institutional Mortgagees as their interests may appear.

15.7. Amendment of Declaration

The changes in Homes, in the Common Elements and in the ownership of the Common Elements that are affected by the condemnation shall be evidenced by an amendment to

OR2801 PG0826

the Declaration that need be approved only by a majority of the Board unless written approvals from Developer and/or Listed Mortgagees are also required pursuant to this Declaration. Such amendment shall be evidenced by a certificate executed by the Association in recordable form in accordance with the Act, and a true copy of such amendment shall be mailed via first class mail by the Association to Developer, all Home Owners and Listed Mortgagees ("Interested Parties"). The amendment shall become effective upon the recording of such certificate amongst the Public Records of the County; provided, however, such amendment shall not be recorded until thirty (30) days after the mailing of a copy thereof to the Interested Parties unless such thirty (30)-day period is waived in writing by the Interested Parties.

16. PROVISION FOR APPORTIONMENT OF TAX OR SPECIAL ASSESSMENT IF LEVIED AND ASSESSED AGAINST THE CONDOMINIUM AS A WHOLE

OR2801 PG0827

16.1. New Total Tax

In the event that any taxing authority having jurisdiction over the Condominium shall levy or assess any tax or special assessment against the Condominium as a whole as opposed to levying and assessing such tax or special assessment against each Home and its appurtenant undivided interest in Common Elements, as now provided by law ("New Total Tax"), then such New Total Tax shall be paid as a Neighborhood Common Expense by the Association, and any taxes or special assessments which are to be so levied shall be included wherever possible in the estimated annual "Budget" (as hereinafter defined) of the Association or shall be separately levied and collected as a Special Assessment by the Association against all of the Home Owners of all Homes. Each Home Owner shall be assessed by and shall pay to the Association a percentage of the New Total Tax equal to that Home Owner's percentage interest in the Common Elements. In the event that any New Total Tax shall be levied, then the assessment by the Association shall separately specify and identify the portion of such assessment attributable to such New Total Tax and such portion shall be and constitute a lien prior to all mortgages and encumbrances upon any Home and its appurtenant percentage interest in Common Elements, regardless of the date of the attachment and/or recording of such mortgage or encumbrances, to the same extent as though such portion of New Total Tax had been separately levied by the taxing authority upon each Home and its appurtenant percentage interest in Common Elements.

16.2. Personal Property Taxes

All personal property taxes levied or assessed against personal property owned by the Association and all federal and state income taxes levied and assessed against the Association shall be paid by the Association and shall be included as a Neighborhood Common Expense in the Budget of the Association.

17. OCCUPANCY AND USE RESTRICTIONS

In order to preserve the values and amenities of the Condominium, the following provisions shall be applicable to the Condominium Property:

17.1. Single-Family Use

The Homes shall be used for single-family residences only. No separate part of a Home may be rented and no transient (as defined in Chapter 509, Florida Statutes) may be accommodated therein for compensation or commercial purposes. No "time-share" is permitted. A Home may not be leased for a period of less than thirty (30) days nor more than three (3) times per calendar year. All leases must be in writing, and copies of the shall be delivered to the Association upon execution. A Home owned by a corporation, partnership or other legal entity, as the case may be, may be occupied by the person indicated in the Voting Certificate on file with the Association and their families, and any lessees of the corporation, partnership, or other legal entity, as the case may be, who otherwise qualify as provided in the Neighborhood Documents.

17.2 Approval by Declarant of Improvements

As described in Article VIII of the Community Declaration, all buildings, structures, landscaping and improvements to be built or in Bonita Bay, including the Condominium must be approved by Declarant. The Community Declaration provides the procedure and method of obtaining Declarant approval.

17.3. Nuisance

A Home Owner shall not permit or suffer anything to be done or kept in his or her Home which will: (i) increase the insurance rates on his or her Home, the Common Elements or any portion of Bay Pointe at Bonita Bay ; (ii) obstruct or interfere with the rights of other Home Owners or the Association; or (iii) annoy other Home Owners by unreasonable noises or otherwise. A Home Owner shall not commit or permit any nuisance, immoral or illegal act in his or her Home, on the Common Elements or any portion of Bay Pointe at Bonita Bay .

OR2801 PG0828

17.4. Signs

A Home Owner (with the exception of Developer, for so long as Developer is a Home Owner) shall show no sign, advertisement or notice of any type on the Common Elements, other portions of Bay Pointe at Bonita Bay or in or upon his or her Home so as to be visible from the Common Elements, or any public way, except as may be previously and specifically approved in writing by Declarant and the Board. Developer specifically reserves the right to place and maintain identifying or informational signs on any building located on the Condominium Property as well as any signs in connection with its sales activities.

17.5. Animals

Except as provided under the rules and regulations promulgated by the Association from time to time and Paragraph 8.18 of the Community Declaration, a Home Owner shall not keep, raise or breed any pet or other animal, livestock or poultry upon any portion of the Condominium Property. No Home Owner is permitted to keep a domestic pet (i.e. dogs, cats and birds) in his or her Home either temporarily or permanently without the prior written permission of the Board. Such permission in one instance shall not be deemed to institute a blanket permission in any other instance and any such permission may be revoked at any time in the sole discretion of the Board. However, under no circumstances may a pit bull be permitted on any portion of Bay Pointe at Bonita Bay . Any pet must be carried or kept on a leash when outside of a Home or fenced-in area. No pet shall be kept on a leash when outside of a Home or in any screened balcony or patio, unless someone is present in the Home. A Home Owner shall immediately pick up and remove any solid animal waste deposited by his or her pet. The Home Owner shall indemnify the Association and hold it harmless against any loss or liability of any kind or character whatsoever arising from or growing out of having any animal in Bay Pointe at Bonita Bay . If a dog or any other animal becomes obnoxious to the Home Owners by barking or otherwise, the Home Owner thereof must cause the problem to be corrected; or, if it is not corrected, the Home Owner, upon written notice by the Association, will be required to dispose of the animal. The Association will promulgate rules and regulations from time to time designating other rules as necessary to regulate pets.

17.6. Clotheslines

No clothesline or other similar device shall be allowed in any portion of the Condominium Property. Clotheslines within a Home shall be concealed from view from all portions of Bay Pointe at Bonita Bay .

17.7. Window Decor

Window treatments shall consist of drapery, blinds, decorative panels or tasteful other window covering, and no newspaper, sheets or other temporary window treatments are permitted, except for periods not exceeding two (2) weeks after a Home Owner or tenant first moves into a

Home or when permanent window treatments are being cleaned or repaired. Reflective or foil window treatments are prohibited. All window treatments installed within a Home which are visible from the exterior of the Home shall have a white backing, unless otherwise approved in writing by the Board. Window tinting is permitted provided that the type and method of tinting is first approved by Declarant.

17.8. Removal of Sod and Shrubbery; Alteration of Drainage, etc.

Except for Developer's acts and activities with regard to the development of the Condominium, no sod, top soil, muck, trees or shrubbery shall be removed from the Condominium Property and no change in the condition of the soil or the level of land of the Condominium Property shall be made which would result in any permanent change in the flow or drainage of surface water within the Condominium without prior written consent of the Board.

17.9. Antenna, Aerial and Satellite Dish

No antennae, aerials, ham radios or satellite dishes shall be placed upon any portion of a Home, the Condominium Property or Bay Pointe at Bonita Bay , except as may be required in connection with the provision of a cable television or master antennae system servicing Bay Pointe at Bonita Bay or to comply with the terms of the Community Declaration.

17.10. Litter

In order to preserve the beauty of the Condominium, no garbage, trash, refuse or rubbish shall be deposited, dumped or kept upon any part of the Condominium Property except in proper sized, closed plastic bags for curbside pick up as required or in closed containers, dumpsters or other garbage collection facilities deemed suitable by the Board. All containers, dumpsters and other garbage collection facilities shall be screened from view and kept in a clean condition with no noxious or offensive odors emanating therefrom.

17.11. Radio Transmission

No ham radios or radio transmission equipment shall be operated or permitted to be operated within the Condominium Property without the prior written consent of the Board.

17.12. Vehicles

Motor homes, trailers, recreational vehicles, boats, campers, motorcycles, trucks and vans or trucks used for commercial purposes shall not be permitted to be parked or stored in or on Bay Pointe at Bonita Bay unless kept fully enclosed in a garage except for trucks furnishing goods and services during the daylight hours and except as the Association may designate for such use by appropriate rules and regulations. The Association and the Community Association shall have the right to authorize the towing away of any vehicles which violate this Declaration or the rules and regulations of the Association, with the costs to be borne by the Home Owner or violator. In addition, the Board shall adopt rules and regulations from time to time regulating and limiting the size, weight, type and place and manner of operation of vehicles on the Condominium Property.

17.13. Garages

No garage shall be erected which is separate from the Home. No garage shall be permanently enclosed so as to make such garage unusable by an automobile, and no portion of a garage originally intended for the parking of an automobile shall be converted into a living space or storage area. No individual air conditioning units which are visible from outside the Home shall be permitted in a garage. All garage doors shall remain closed when not in use. Garages are intended for the primary use of parking and storage of motor vehicles. Home Owners and their lessees and the family members, guests and invitees of such Home Owners and lessees, may not store personal property in a garage and then park motor vehicles in the unassigned parking areas of the Condominium.

17.14. Projections

No Home Owner shall cause anything to project out of any window or door except as may be approved in writing by the Association.

17.15. Condition of Homes

Each Home Owner shall keep his or her Home in a good state of preservation and cleanliness and shall not sweep or throw or permit to be swept or thrown therefrom or from the doors or windows thereof any dirt or other substances.

17.16. Hurricane Season

Each Owner who plans to be absent from his or her Home during the hurricane season must prepare his or her Home prior to his or her departure by removing all furniture, potted plants and other movable objects, if any, from the balcony or patio, if any, and by designating a responsible firm or individual satisfactory to the Association to care for the Home should the Home suffer hurricane damage. No hurricane shutters may be installed without the prior written consent of the Association, which consent may be unreasonably withheld. If the installation of hurricane shutters is made which does not conform with the specifications approved by the Association, then the hurricane shutters will be made to conform by the Association at the Owner's expense or they shall be removed.

OR2801 PG0830

17.17. Structural Modifications

A Home Owner may not make or cause to be made any structural modifications to his or her Home without the Board's and Declarant's prior written consent.

17.18. Tree Removal

Developer is using its best efforts to save as many, if any, of the existing trees on the Condominium Property as is possible during the construction of the Condominium. Developer makes no warranty or guarantee to Home Owners that all of the existing trees will survive. Developer is not responsible nor is Developer required to replace or remove the trees in the event that the trees do not survive; any expenses associated therewith shall be a Neighborhood Common Expense. After the construction of the Condominium by Developer, no trees shall be removed except for diseased or dead trees and trees needing to be removed to promote the growth of other trees or for safety reasons, unless approved by the Board.

17.19. Board's Rule-Making Power

The Association, through its Board, may, from time to time, promulgate such other rules and regulations with respect to the Condominium as it determines to be in the best interests of the Condominium and the Home Owners. The Board may promulgate, modify, alter, amend or rescind such rules and regulations provided such promulgation, modifications, alterations and amendments: (i) are consistent with the use covenants set forth in the Neighborhood Documents and Community Documents; (ii) apply equally to all lawful Bay Pointe at Bonita Bay residents without discriminating on the basis of whether a Home is occupied by a Home Owner or his or her lessee; and (iii) in Developer's opinion, for so long as Developer holds any Homes for sale in the ordinary course of business, would not be detrimental to the sales of Homes by Developer.

17.20. Limitations

Notwithstanding any other rule, regulation, or restriction to the contrary herein contained, the Board shall make reasonable accommodations in the rules, regulations or restrictions, if such accommodations may be necessary to afford a handicapped person equal opportunity to use and enjoy the Condominium Property.

17.21. Additional Restrictions

For additional restrictions which are applicable to the Condominium Property and the Home Owners, please refer to the Community Declaration and Unit Thirty-Seven Declaration. The Unit Thirty-Seven Declaration contains use rights on the lakes located within Bay Pointe at Bonita Bay . In the event of a conflict between the provisions of this Declaration and the provisions of the Community Declaration or the Unit Thirty-Seven Declaration, the provisions of the Community Declaration or the Unit Thirty-Seven Declaration, as the case may be, shall control; provided, however, that this Declaration and the other Neighborhood Documents may contain provisions more restrictive than contained in the Community Declaration and the other Community Documents and the Unit Thirty-Seven Declaration, in which event such more restrictive provisions shall control.

18. PARKING SPACES

18.1. Parking Spaces shall be used and assigned in accordance with the provisions of this Article 18. The use of a Parking Space shall be an appurtenance to the Home to which it is assigned.

18.2. Assignment of Parking Spaces

Developer has the right, but not the obligation, to assign the use of a particular parking space ("Parking Space") located on the Condominium Property to a particular Home at the time the Home is originally acquired from Developer.

18.2.1. The use of Parking Spaces have been set aside for the exclusive use of the Home Owners and their lessees and the family members, guests and invitees of such Home Owners and lessees as hereinafter more particularly set forth. Developer has determined that each Home Owner will be automatically assigned the Parking Space which comprises the driveway located in front of the garage of the respective Home, which is limited to the amount of space required to park the car. The use of such Parking Space shall thereupon be appurtenant to said Home and shall be deemed encumbered by and subject to any mortgage or to any claim thereafter encumbering said Home. Upon conveyance of or passing of title to the Home to which the use of such Parking Space is appurtenant, the Home Owner receiving such title shall automatically be assigned the Parking Space which comprises the driveway located adjacent to the Home to which the Home Owner received title.

18.2.2. Any Parking Space which is not assigned to a particular Home may be reserved by Developer for the exclusive use of Developer and its agents, contractors and lessees for so long as Developer owns one (1) or more Homes. Any unassigned Parking Space which is not reserved by Developer as set forth above is available solely in accordance with the rules and regulations promulgated by the Board.

Parking Spaces which have been set aside for the exclusive use of a Home Owner shall be Limited Common Elements and shall be maintained, repaired and replaced by the Association pursuant to Article 19 of this Declaration. The use of the Parking Spaces may be regulated and limited by rules and regulations promulgated by the Board.

19. MAINTENANCE AND REPAIR PROVISIONS

19.1. By Home Owners

19.1.1. Maintenance and Repair. Each Home Owner shall maintain in good condition, repair and replace at his or her expense all portions of his or her Home and Limited Common Elements, including the interior of the garage, the garage door and appurtenant equipment and the following equipment or fixtures if located within his or her Home or on the Limited Common Elements assigned to his or her Home, electrical fixtures, appliances, air conditioning or heating equipment, water heaters or built-in cabinets including any screening on his or her lanai, balcony, terrace or porch, all window panes and all interior surfaces within or surrounding his or her Home (such as the surfaces of the walls, ceilings and floors) and all exterior doors, casings and

OR2801 PG0831

hardware therefor; and pay for any utilities which are separately metered to his or her Home. Every Home Owner must perform promptly all maintenance and repair work within his or her Home, as aforesaid, which if not performed would affect the Condominium Property, Bay Pointe at Bonita Bay in its entirety or a Home belonging to another Home Owner. Each Home Owner shall be expressly responsible for the damages and liabilities that his or her failure to perform his or her above mentioned responsibilities may engender. Said Home shall be maintained and repaired in accordance with the building plans and specifications utilized by Developer, copies of which are to be on file in the office of the Association, except for changes or alterations approved by the Board and Declarant as provided in this Declaration and the Community Declaration.

19.1.2. Alterations. No Home Owner shall make any alterations in the Building or the Common Elements which are to be maintained by the Association or remove any portion thereof or make any additions thereto or do anything which would or might jeopardize or impair the safety or soundness of the Building, the Common Elements, the Limited Common Elements or which, in the sole opinion of the Board and Declarant, would detrimentally affect the architectural design of the building without first obtaining the written consent of the Board and Declarant, if applicable.

OR 2801 PG 0832

19.1.3. Painting and Board Approval. No Home Owner shall paint, refurbish, stain, alter, decorate, repair, replace or change the Common Elements or any outside or exterior portion of the Building maintained by the Association, including terraces, balconies, porches, doors or window frames (except for replacing window panes), etc. No Home Owner shall have any exterior lighting fixtures, mail boxes, window screens, screen doors, awnings, hurricane shutters, hardware or similar items installed which are not consistent with the general architecture of the Building maintained by the Association without first obtaining specific written approval of the Board and Declarant. The Board shall not grant approval if, in its opinion, the effect of any of the items mentioned herein will be unsightly as to the portion of the Building maintained by the Association and unless such items substantially conform to the architectural design of the Building and the design of any such items which have previously been installed at the time the Board approval is requested.

19.1.4. Duty to Report. Each Home Owner shall promptly report to the Association or its agents any defect or need for repairs on the Condominium Property, the responsibility for the remedying of which is that of the Association.

19.1.5. Use of Licensed Plumbers and Electricians. No Home Owner shall have repairs made to any plumbing or electrical wiring within a Home, except by licensed plumbers or electricians authorized to do such work by the Board. The provisions as to the use of a licensed plumber or electrician shall not be applicable to any Institutional Mortgagee or to Developer. Plumbing and electrical repairs within a Home shall be paid for by and shall be the financial obligation of the Home Owner, unless such repairs are made in a Home to plumbing and electrical systems servicing more than one (1) Home.

19.1.6. Access by Board. Any officer of the Association or any agent of the Board has the irrevocable right of access to each Home during reasonable hours when necessary for the maintenance, repair or replacement of any Common Elements or for making emergency repairs therein necessary to prevent damage to the Common Elements or to another Home.

19.1.7. Air-Conditioning. Air conditioning units and service lines regarding any such air conditioning units which serve only one Home shall be maintained, replaced or repaired by the Home Owner whose Home is serviced by the air conditioning unit; provided, however, that if any repair or alteration is to be made in any Common Elements, the Board shall approve all such work.

19.1.8. Liability for Actions. A Home Owner shall be liable for the expense of any maintenance, repair or replacement of any real or personal property rendered necessary by his or her act, negligence or carelessness, or by that of his or her lessee or any member of their families, or their guests, employees or agents (normal wear and tear excepted) but only to the extent that such expense is not met by the proceeds of insurance carried by the Association. Such liability shall include the cost of repairing broken windows. A Home Owner shall also be liable for any personal

injuries caused by his or her negligent acts or those of his or her lessee or any member of their families, or their guests, employees or agents. Nothing herein contained, however, shall be construed so as to modify any waiver by insurance companies of rights of subrogation.

19.2. By the Association

19.2.1. Improvements. The responsibility of the Association is to repair, maintain and replace any and all improvements and facilities located upon the Common Elements and the Association Property, including the Parking Spaces, Amenities Center, streets and drives as otherwise provided herein. Maintenance includes, but is not limited to, the following: cleanup, landscape care and replacement, lawn care, services related to drainage areas painting, structural upkeep, roads, sidewalks, parking areas, drives, streets and driveways. The Association shall maintain and repair all exterior walls of the Buildings, including the exterior walls of the Buildings contained within screened lanais, but excluding the screened enclosure itself.

19.2.2. Utilities. The Association shall maintain, repair and replace all conduits, ducts, plumbing, wiring and other facilities for the furnishing of any and all utility services including the operation of the drainage and storm water management system and the maintenance of the sanitary water and sewer service laterals leading to the Buildings if such water and sewer lines are not maintained by the appropriate utility company, but excluding therefrom appliances, wiring, plumbing fixtures and other facilities within a Home.

OR2801 PG0833

19.2.3. Lakes. Notwithstanding anything contained herein to the contrary, the Community Association is responsible to maintain the wet land reserve easements consisting of Tracts 2, 4, and 5, as depicted on the Site Plan. (The lake depicted as Tract B on the Site Plan is owned and shall be maintained by the Community Association.) "Maintain" as used in this subparagraph consists of all services relating to the lake, including, spraying, if permitted by the Community Association and the appropriate governmental agencies, chemically treating the water, if permitted by the Community Association and the appropriate governmental agencies, controlling water levels, etc.

19.2.4. Compliance With Regulations of Public Bodies. The Association shall perform such acts and do such things as shall be lawfully required by any public body having jurisdiction over the same in order to comply with sanitary requirements, fire hazard requirements, zoning requirements, setback requirements, drainage requirements and other similar requirements designed to protect the public. The cost of the foregoing shall be a Neighborhood Common Expense.

19.2.5. Maintenance of Property Adjacent to Condominium Property. If the Association is permitted by the owner of property adjacent to the Condominium Property or the governmental authority responsible for maintaining same to provide additional maintenance for such adjacent property, and the Board elects to do so in order to enhance the overall appearance of the Condominium, then the expense thereof shall be a Neighborhood Common Expense. The Association shall maintain the banks of lakes to the edge of water on all lakes within the Condominium Property, including the banks of the lake depicted on the Site Plan as Tract B, whether such banks are within or adjacent to the Condominium Property. Such maintenance may include, but is not limited to, grass cutting, tree trimming, sprinkling, fertilizing, spraying, and maintaining and operating any amenities or structures established in such areas.

19.3 Developer's Warranties

Notwithstanding anything contained in this Article 19 to the contrary, each Home Owner acknowledges and agrees that Developer shall be irreparably harmed if a Home Owner undertakes the repair or replacement of any defective portion of a Home, a Building, the Common Elements or any other real or personal property constituting the Condominium Property during the time in which Developer is liable under any warranties in connection with the sale of any Home. Accordingly, each Home Owner hereby agrees (i) to promptly, upon such Home Owner's knowledge of the existence of any such defective portion, provide written notice to Developer specifying each

such defective portion, upon the receipt of which Developer shall have thirty (30) days ("Repair Period") to commence the repair or replacement of such defective portion and diligently pursue the completion thereof; and (ii) not to repair, replace or otherwise adjust any such defective portion during the Repair Period; provided, however, that if Developer fails to commence the repair or replacement of such defective portion within the Repair Period, such Home Owner may repair or replace same. If any Home Owner fails to comply with the provisions of this Paragraph 19.3, such Home Owner will be deemed to have breached his or her obligation to mitigate damages and such Home Owner's conduct shall constitute an aggravation of damages.

19.4. Conformity with Community Declaration

Notwithstanding anything contained in this Article 19 to the contrary, alterations, improvements, repairs and maintenance of the Condominium Property shall conform to the provisions of the Community Declaration and Unit Thirty-Seven Declaration and all other valid terms and provisions thereof.

OR 2801 PG 0834

20. NEIGHBORHOOD ASSESSMENTS FOR NEIGHBORHOOD COMMON EXPENSES; ESTABLISHMENT AND ENFORCEMENT OF LIENS

20.1. Affirmative Covenant to Pay Neighborhood Common Expenses

In order to: (i) fulfill the covenants contained in this Declaration; (ii) provide for maintenance and preservation of the Common Elements for the recreation, safety, welfare, and benefit of Home Owners, their invitees, guests, family members and lessees, subject to the terms of this Declaration; and (iii) provide for maintenance and preservation of the services and amenities provided for herein, there is hereby imposed upon the Homes and the Home Owners thereof the affirmative covenant and obligation to pay the Neighborhood Assessments including, but not limited to, the Annual Assessments. Each Home Owner, by acceptance of a deed or other instrument of conveyance for a Home, whether or not it shall be so expressed in any such deed or instrument, shall be so obligated and agrees to pay to the Association all Neighborhood Assessments determined in accordance with the provisions of this Declaration and all of the covenants set forth herein shall run with the Condominium Property and each Home therein.

20.2. Lien

The Annual Assessment and Special Assessments, as determined in accordance with Article 21 hereof, together with Interest thereon and costs of collection thereof, including Legal Fees as hereinafter provided, are, pursuant to the Act, subject to a lien right on behalf of the Association to secure payment thereof and such Neighborhood Assessments are hereby declared to be a charge on each Home and shall be a continuing lien upon the Home against which each such Neighborhood Assessment is made. Each Neighborhood Assessment against a Home together with Interest thereon and costs of collection thereof, including Legal Fees, shall be the personal obligation of the person, persons, entity and/or entities owning the Home so assessed. The Association's statutory lien for Neighborhood Assessments shall be effective only from and after the time of recordation amongst the Public Records of the County of a written acknowledged statement by the Association setting forth the amount due to the Association as of the date the statement is signed. Upon full payment of all sums secured by such lien or liens, the party making payment shall be entitled to a recordable satisfaction of the statement of lien.

20.2.1. Personal Obligation. Each Neighborhood Assessment against a Home, together with Interest thereon and costs of collection thereof, including Legal Fees, shall be the personal obligation of the person, persons, entity and/or entities owning the Home so assessed.

20.2.2. Institutional Mortgagees. To the extent permitted by law, an Institutional Mortgagee or other person who obtains title to a Home by foreclosure of a first mortgage, or Institutional Mortgagee who obtains title to a Home by deed in lieu of foreclosure, shall not be liable for the unpaid Neighborhood Assessments that became due prior to such acquisition of title, unless the payment of Neighborhood Assessments was secured by a claim of lien recorded by the

Association prior to the recording of the first mortgage. It is acknowledged that as of the date of recording this Declaration, the Act provides that a first mortgagee who acquires title to a Home by foreclosure or by deed in lieu of foreclosure is liable for the unpaid Neighborhood Assessment that became due prior to the mortgagee's receipt of the deed, however, the mortgagee's liability is limited to a period not exceeding six (6) months (which six (6) month period commences thirty (30) days after the date the first mortgagee receives the last payment of principal or interest), or one percent (1%) of the original mortgage debt, whichever amount is less. In the event the Act is amended to reduce the liability of a first mortgagee or other person who acquires title to a Home by foreclosure or deed in lieu of foreclosure, the first mortgagee or person acquiring title shall receive the benefit of such reduced liability. Neighborhood Assessments which are not due from such Institutional Mortgagee, shall become a Neighborhood Common Expense collectible from all Home Owners pursuant to Paragraph 22.9 hereof.

20.3. Enforcement

In the event that any Home Owner shall fail to pay any Annual Assessment, or installment thereof, or any Special Assessment, or installment thereof, charged to his or her Home within fifteen (15) days after the same becomes due, then the Association, through its Board, shall have the following remedies:

(i) To advance, on behalf of the Owner in default, funds to accomplish the needs of the Association; provided that: (a) the amount or amounts of monies so advanced, including Legal Fees and expenses which have been reasonably incurred because of or in connection with such payments, together with Interest thereon, may thereupon be collected by the Association; and (b) such advance by the Association shall not waive the default of the Owner in failing to make its payments;

(ii) To accelerate the entire amount of any Assessments for the remainder of the calendar year in accordance with the provisions of the Act and rules set forth in the Florida Administrative Code promulgated by the Division of Florida Land Sales, Condominiums and Mobile Homes;

(iii) To file an action in equity to foreclose its lien at any time after the effective date thereof or an action in the name of the Association in like manner as a foreclosure of a mortgage on real property; and

(iv) To file an action at law to collect the amount owing plus Interest and Legal Fees without waiving its lien rights and its right of foreclosure.

21. METHOD OF DETERMINING, ASSESSING AND COLLECTING NEIGHBORHOOD ASSESSMENTS

The Neighborhood Assessments as hereinafter set forth and described shall be assessed to and collected from Home Owners on the following basis:

21.1. Determining Annual Assessment

21.1.1. Expenses. The total anticipated Neighborhood Common Expenses for each calendar year shall be set forth in a schedule to the Budget of the Association which shall be prepared by the Board as described in the Articles and Bylaws. The total anticipated Neighborhood Common Expenses shall be that sum necessary for the maintenance and operation of the Condominium and such expenses shall be allocated to the Homes based upon each Home's share of the Neighborhood Common Expenses, which allocated sum, together with each Home Owner's share of "Common Expenses" as determined in accordance with the Community Declaration, shall be assessed as the "Annual Assessment." The Annual Assessment may be adjusted quarterly in the instance where the Board determines that the estimated Neighborhood Common Expenses are

OR2801 PG0835

insufficient to meet the actual Neighborhood Common Expenses being incurred, in which event the anticipated Neighborhood Common Expenses for the remaining quarters may be increased accordingly in calculating the Annual Assessment.

21.1.2. Assessment Payment. The Annual Assessment shall be payable quarterly in advance on the first day of each quarter of a calendar year. The Association may at any time require the Home Owners to maintain a minimum balance on deposit with the Association to cover future installments of Neighborhood Assessments. The amount of such deposit shall not exceed one-quarter (1/4) of the then current Annual Assessment for the Home.

21.2. Developer's Guarantee

From the recording of this Declaration until December 31, 1996 Developer guarantees that assessments for Neighborhood Common Expenses of the Association will not exceed Two Hundred Twenty One and 33/100 Dollars ($221.33) per month. Developer will pay all Neighborhood Common Expenses not paid for by assessments of Homes ("Guarantee for Neighborhood Common Expenses"). Developer's guarantee is made in accordance with the provisions of Section 718.116(9)(a)(2) of the Act. The expiration of the guarantee period is December 31, 1997; provided, however, that the Guarantee for Neighborhood Common Expenses shall terminate on the Majority Election Date in the event the Majority Election Date occurs prior to December 31, 1997.

Developer reserves the right to extend the guarantee period for one year to December 31, 1998; provided, however, the guarantee shall terminate on the Majority Election Date in the event the Majority Election Date occurs prior to December 31, 1998.

Neighborhood Assessments determined as provided in Paragraph 21.1 of this Declaration or the Bylaws shall be determined and made commencing January 1, 1997, if Developer does not choose the option to extend the guarantee, or January 1, 1998 if Developer chooses the option to extend the guarantee or the Majority Election Date, whichever is the sooner to occur and Developer will pay any such Neighborhood Assessments for any of the Homes owned by Developer from and after such date.

21.3. Special Assessments

In addition to the Annual Assessment, Home Owners shall be obligated to pay such Special Assessments as shall be levied by the Board in accordance with the Bylaws against their Home either as a result of: (i) extraordinary items of expense; (ii) the failure or refusal of other Home Owners to pay their Annual Assessment; or (iii) such other reason or basis determined by the Board which is not inconsistent with the terms of the Neighborhood Documents or the Act.

22. NEIGHBORHOOD COMMON EXPENSES

The following expenses are declared to be Neighborhood Common Expenses of the Condominium which each Home Owner is obligated to pay to the Association as provided in this Declaration, the Neighborhood Documents and Community Documents.

22.1. Taxes

Any and all taxes levied or assessed at any and all times by any and all taxing authorities including all taxes, charges, assessments and impositions and liens for public improvements, special charges and assessments and water drainage districts, and in general all taxes and tax liens which may be assessed against the Common Elements, Association Property and against any and all personal property and improvements, which are now or which hereafter may be a portion thereof to be placed thereon, including any interest, penalties and other charges which may accrue thereon shall, as appropriate, be considered Neighborhood Common Expenses.

OR2801 PG0836

22.2. Utility Charges

All charges levied for utilities providing services for the Common Elements and Association Property, whether they are supplied by a private or public firm shall, as appropriate, be considered Neighborhood Common Expenses. It is contemplated that this obligation will include all charges for water, gas, electricity, telephone, sewer and any other type of utility or any other type of service charge incurred in connection with the Association Property and the Common Elements. It is contemplated that there shall be one meter for water and sewer lines to each Building or group of Buildings. All charges related to such lines shall be a Neighborhood Common Expense.

22.3. Insurance

The premiums on any policy or policies of insurance required to be maintained under this Declaration and the premiums on any policy or policies the Association determines to maintain on the Condominium Property, Association Property, or specifically related to this Condominium, even if not required to be maintained by the specific terms of this Declaration, shall be Neighborhood Common Expenses, commencing with the recordation of this Declaration and even before such property is owned by the Association.

OR2801 PG0837

22.4. Destruction of Buildings or Improvements

Any sums necessary to repair or replace, construct or reconstruct damages caused by the destruction of any building or structure upon the Common Elements, or any property owned or to be owned by the Association as contemplated by this Declaration, by fire, windstorm, flood or other casualty regardless of whether or not the same is covered in whole or in part by insurance, including all amounts required to be deducted from any proceeds received by the Association from an insurer pursuant to a deductible clause in the applicable insurance agreement, shall be Neighborhood Common Expenses. In the event insurance money shall be payable, such insurance money shall be paid to the Association who shall open an account with a banking institution doing business in the County, for the purpose of providing a fund for the repair and reconstruction of the damage. The Association shall pay into such account, either in addition to the insurance proceeds, or in the event there are no insurance proceeds, such sums as may be necessary so that the funds on deposit will equal the costs of repair and reconstruction of the damage or destruction. The sums necessary to pay for the damage or destruction as herein contemplated shall be considered Neighborhood Common Expenses, but shall be raised by the Association under the provisions for Special Assessments as provided in Paragraph 21.3 of this Declaration. The Association agrees that it will levy Special Assessments to provide the funds for the cost of reconstruction or construction within ninety (90) days from the date the destruction takes place and shall go forward with all deliberate speed so that the construction or reconstruction, repair or replacement, shall be completed, if possible, within nine (9) months from the date of damage.

22.5. Maintenance, Repair and Replacements

Neighborhood Common Expenses shall include all expenses necessary to keep and maintain, repair and replace any and all buildings, improvements, personal property and furniture, fixtures and equipment of the Association upon the Common Elements, or any property owned or to be owned by the Association as contemplated by this Declaration, including landscaping, streets, drives, utility lines, lawn and sprinkler service, in a

manner consistent with the development of the Condominium and in accordance with the covenants and restrictions contained herein, and in conformity with the Community Declaration, the other Community Documents, and with all orders, ordinances, rulings and regulations of any and all federal, state and city governments having jurisdiction thereover including the statutes and laws of the State of Florida and the United States. This shall include any expenses attributable to the maintenance and repair and replacement of pumps or other equipment, if any, located upon or servicing the Condominium Property, or any property owned or to be owned by the Association as contemplated by this Declaration, pursuant to agreements between the Association and utility corporations. Any expenses for replacements which would not be in the nature of normal repair and maintenance shall be the subject of a Special Assessment as provided in Paragraph 21.3 of this Declaration.

22.6. Administrative and Operational Expenses

The costs of administration of the Association including, but not limited to, any secretaries, bookkeepers and other employees necessary to carry out the obligations and covenants of the Association as to the Condominium shall be deemed to be Neighborhood Common Expenses. In addition, it is contemplated that the Association may retain a management company or companies or contractors (any of which management companies or contractors may be, but are not required to be, a subsidiary, affiliate or an otherwise related entity of Developer) to assist in the operation of the Condominium Property, Association Property and obligations of the Association hereunder. The fees or costs of this or any other management company or contractors so retained shall be deemed to be part of the Neighborhood Common Expenses hereunder as will fees which may be required to be paid to the Division of Florida Land Sales, Condominiums and Mobile Homes from time to time.

OR2801 PG0838

22.7. Indemnification

The Association covenants and agrees that it will indemnify and hold harmless Developer and the members of the Board from and against any and all claims, suits, actions, damages, and/or causes of action arising from any personal injury, loss of life, and/or damage to property sustained in or about the Condominium Property, Association Property or the appurtenances thereto from and against all costs, Legal Fees, expenses and liabilities incurred in and about any such claim, the investigation thereof or the defense of any action or proceeding brought thereon, and from and against any orders, judgments and/or decrees which may be entered therein. Included in the foregoing provisions of indemnification are any expenses that Developer may be compelled to incur in bringing suit for the purpose of compelling the specific enforcement of the provisions, conditions and covenants contained in this Declaration to be kept and performed by the Association.

22.8. Compliance with Laws

The Association shall take such action as it determines necessary or appropriate in order for the Common Elements, and any property owned or to be owned by the Association as contemplated by this Declaration, to be in compliance with all applicable laws, statutes, ordinances and regulations of any governmental authority, whether federal, state or local, including, without limitation, any regulations regarding zoning requirements, setback requirements, drainage requirements, sanitary conditions and fire hazards, and the cost and expense of such action taken by the Association shall be a Neighborhood Common Expense.

22.9. Failure or Refusal of Home Owners to Pay Annual Assessments

Funds needed for Neighborhood Common Expenses due to the failure or refusal of Home Owners to pay their Annual Assessments levied shall, themselves, be deemed to be Neighborhood Common Expenses and properly the subject of a Neighborhood Assessment.

22.10. Extraordinary Items

Extraordinary items of expense under this Declaration such as expenses due to casualty losses and other extraordinary circumstances shall be the subject of a Special Assessment.

22.11. Matters of Special Assessments Generally

Amounts needed for capital improvements, as hereinbefore set forth, or for other purposes or reasons as determined by the Board to be the subject of a Special Assessment which are not inconsistent with the terms of any of the Neighborhood Documents or the Community Declaration must also be approved by a majority vote of the Home Owners at any meeting of members of the Association having a quorum, except that no such approval need be obtained for a Special Assessment for the replacement or repair of a previously existing improvement on the Condominium Property, and any property owned or to be owned by the Association as contemplated by this Declaration, which was destroyed or damaged, it being recognized that the sums needed for such capital expenditure shall be the subject of a Special Assessment.

OR2801 PG0839

22.12. Costs of Reserves

The funds necessary to establish an adequate reserve fund ("Reserves") for periodic maintenance, repair and replacement of the Common Elements, and any property owned or to be owned by the Association as contemplated by this Declaration, and the facilities and improvements thereupon in amounts determined sufficient and appropriate by the Board from time to time shall be a Neighborhood Common Expense. Reserves shall be levied, assessed and/or waived in accordance with the Act. The Reserves shall be deposited in a separate account to provide such funds and reserves. The monies collected by the Association on account of Reserves shall be and shall remain the exclusive property of the Association and no Home Owner shall have any interest, claim or right to such Reserves or any fund composed of same.

22.13. Miscellaneous Expenses

Neighborhood Common Expenses shall include the cost of all items of costs or expense pertaining to or for the benefit of the Association or the Common Elements and any property owned or to be owned by the Association as contemplated by this Declaration, or any part thereof, not herein specifically enumerated and which is determined to be an appropriate item of Neighborhood Common Expense by the Board.

22.14. Property to be Owned or Maintained by the Association

Notwithstanding the current ownership of any real or personal property by Developer, in the event it is contemplated that such property will be owned or is to be maintained by the Association, then the costs associated by the ownership or maintenance shall be a Neighborhood Common Expense commencing with the recordation of this Declaration.

23. PROVISIONS RELATING TO PROHIBITION OF FURTHER SUBDIVISION

23.1. Subdivision

Except regarding such rights as may be granted by Developer hereunder, the space within any of the Homes and Common Elements shall not be further subdivided. No time share units may be created in any portion of the Condominium Property. Any instrument, whether a conveyance, mortgage or otherwise, which describes only a portion of the space within any Home shall be deemed to describe the entire Home owned by the person executing such instrument and the interest in the Common Elements appurtenant thereto.

23.2. Incorporation of Section 718.107

The provisions of Section 718.107 of the Act are specifically incorporated into this Declaration.

24. PROVISIONS RELATING TO SEVERABILITY

If any provision of this Declaration, any of the other Neighborhood Documents or the Act is held invalid, the validity of the remainder of this Declaration, the Neighborhood Documents or the Act shall not be affected.

25. PROVISIONS RELATING TO INTERPRETATION

25.1. Titles

Article, Paragraph and subparagraph titles in this Declaration are intended only for convenience and for ease of reference, and in no way do such titles define, limit or in any way affect this Declaration or the meaning or contents of any material contained herein.

25.2. Gender

Whenever the context so requires, the use of any gender shall be deemed to include all genders, the use of the plural shall include the singular and the singular shall include the plural.

25.3. Member

As used herein, the term "member" means and refers to any person, natural or corporate, who becomes a member of the Association, whether or not that person actually participates in the Association as a member.

25.4. Rule Against Perpetuities

In the event any court should hereafter determine any provisions as originally drafted herein in violation of the rule of property known as the "rule against perpetuities" or any other rule of law because of the duration of the period involved, the period specified in this Declaration shall not thereby become invalid, but instead shall be reduced to the maximum period allowed under such rule of law, and for such purpose, "measuring lives" shall be that of the incorporator of the Association.

26. PROVISIONS CONTAINING REMEDIES FOR VIOLATION

Each Home Owner shall be governed by and shall comply with the Act and all of the Neighborhood Documents as such Neighborhood Documents may be amended and supplemented from time to time. Failure to do so shall entitle the Association, any Home Owner or any Institutional Mortgagee holding a mortgage on any portion of the Condominium Property to either sue for injunctive relief, for damages or for both, and such parties shall have all other rights and remedies which may be available at law or in equity. The failure to enforce promptly any of the provisions of the Neighborhood Documents shall not bar their subsequent enforcement. In any proceeding arising because of an alleged failure of a Home Owner to comply with the terms of the Neighborhood Documents, the prevailing party shall be entitled to recover the costs of the proceeding and Legal Fees. The failure of the Board to object to Home Owners' or other parties' failure to comply with covenants or restrictions contained herein or in any of the other Neighborhood Documents (including the rules and regulations promulgated by the Board) now or hereafter promulgated shall in no event be deemed to be a waiver by the Board or of any other party having an interest therein of its rights to object to same and to seek compliance therewith in accordance with the provisions of the Neighborhood Documents.

OR2801 PG0840

27. PROVISIONS FOR ALTERATIONS OF HOMES BY DEVELOPER

27.1. Developer's Reserved Right

Developer reserves the right to non materially alter, change or modify the interior design and arrangement of all Homes and to alter the boundaries between the Homes as long as Developer owns the Homes so altered (which alterations in Developer's Homes are hereinafter referred to as the "Developer Alterations"). Any material changes shall require the majority approval of the voting interests in the Condominium.

27.2. Developer Alterations Amendment

Any Developer Alterations which will alter the boundaries of existing Common Elements of this Condominium other than interior walls abutting Homes owned by Developer and the Common Elements therein and not including proposed Common Elements of any Subsequent Phase not then submitted to condominium ownership will first require an amendment to this Declaration in the manner provided in Article 28 hereof.

In the event the Developer Alterations do not require an amendment in accordance with the above provisions, then as long as Developer owns the Homes being affected, an amendment of this Declaration shall be filed by Developer ("Developer's Amendment") in accordance with the provisions of this Paragraph. Such Developer's Amendment need be signed and acknowledged only by Developer and need not be approved by the Association, Home Owners or lienors or mortgagees of the Homes, whether or not such approvals are elsewhere required for an amendment of this Declaration; provided, however, if the amendment is material, then the approval of a majority of the voting interests in the Condominium is required.

OR2801 P60841

28. PROVISIONS FOR AMENDMENTS TO DECLARATION

28.1. General Procedure

Except as to the Amendment described in Paragraph 27.2 hereof, and the matters described in Paragraphs 28.2, 28.3, 28.4, 28.5, 28.6 and 28.7 below and except where a greater percentage vote is required by this Declaration for certain action (in which case such greater percentage shall also be required to effectuate an amendment) (e.g., Paragraph 11.2 herein), this Declaration may be amended at any regular or special meeting of the Home Owners called and held in accordance with the Bylaws, by the affirmative vote of not less than two-thirds (2/3) of the Home Owners; provided that any amendment shall be approved or ratified by a majority of the Board as a whole. An amendment to the Declaration shall be evidenced by a certificate executed by the Association and recorded in accordance with the Act. A true copy of such amendment shall be sent by certified mail by the Association to Developer and to all Institutional Mortgagees ("Mailing"). The amendment shall become effective upon the recording of the certificate amongst the Public Records, but the certificate shall not be recorded until thirty (30) days after the Mailing, unless such thirty (30)-day period is waived in writing by Developer and all Institutional Mortgagees.

28.2. Material Alteration

Except as otherwise provided in this Declaration, no amendment of the Declaration shall change the configuration or size of any Home in any material fashion, materially alter or modify the appurtenances to such Home, change the proportion or percentage by which the Home Owner shares the Neighborhood Common Expenses and owns the Common Surplus and Common Elements or the Home's voting rights in the Association, unless: (i) the record owner of the Home and all record holders of liens on the Home join in the execution of the amendment; and (ii) all the record Home Owners of all other Homes approve the amendment. Any such amendments shall be evidenced by a certificate joined in and executed by all the Home Owners and all Institutional Mortgagees holding mortgages thereon and shall be recorded in the same manner as provided in Paragraph 28.1; provided, however, no amendment to this Declaration shall change the method of determining Annual Assessments unless approved in writing by the Institutional Mortgagees holding

mortgages encumbering two-thirds (2/3) of the Homes encumbered by mortgages held by Institutional Mortgagees.

28.3. Defect, Error or Omission

Whenever it shall appear to the Board that there is a defect, error or omission in the Declaration, or in other documentation required by law to establish this Condominium, the Association, through its Board, shall immediately call for a special meeting of the Home Owners to consider amending the Declaration or other Neighborhood Documents. Upon the affirmative vote of one-third (1/3) of the Home Owners, with there being more positive votes than negative votes, the Association shall amend the appropriate documents. A true copy of such amendment shall be sent pursuant to the Mailing. The amendment shall become effective upon the recording of the certificate amongst the Public Records, but the certificate shall not be recorded until thirty (30) days after the Mailing, unless such thirty (30) day period is waived in writing by Developer and all Institutional Mortgagees.

OR2801 PG0842

28.4. Rights of Developer, Additional Owner and Institutional Mortgagees

No amendment shall be passed which shall materially impair or prejudice the rights or priorities of Developer, the Association, Additional Owner or any Institutional Mortgagee under this Declaration and the other Neighborhood Documents without the specific written approval of Developer, the Association, Additional Owner or any Institutional Mortgagees affected thereby. The consent of such Institutional Mortgagee may not be unreasonably withheld. Furthermore, no amendment shall be passed which shall alter or affect the obligations to comply with the covenants contained in Article 10 herein relative to the plan for development for Bay Pointe at Bonita Bay . In addition, any amendment that would affect the surface water management system, including the water management portions of the Common Elements and Association Property, if any, must have the prior approval of the South Florida Water Management District and Declarant.

28.5. Scrivener's Error

The Association may amend this Declaration and any exhibits hereto, in order to correct a scrivener's error or other defect or omission by the affirmative vote of two-thirds (2/3) of the Board without the consent of the Home Owners provided that such amendment does not materially and adversely affect the rights of Home Owners, lienors or mortgagees. This amendment shall be signed by the President of the Association and a copy of the amendment shall be furnished to the Association and all Listed Mortgagees and sent pursuant to the Mailing as soon after recording thereof amongst the Public Records, as is practicable.

28.6. Amendments Required by Secondary Mortgage Market Institutions

Notwithstanding anything contained herein to the contrary, Developer may, without the consent of the Home Owners, file any amendment which may be required by an Institutional Mortgagee for the purpose of satisfying its Planned Unit Development criteria or such criteria as may be established by such mortgagee's secondary mortgage market purchasers, including, without limitation, the Federal National Mortgage Association and the Federal Home Loan Mortgage Corporation; provided, however, that any such Developer filed amendments must be in accordance with any applicable rules, regulations and other requirements promulgated by the United States Department of Housing and Urban Development.

28.7. Veterans Administration Approval

In the event that the Condominium receives Veterans Administration project approval, any amendment to this Declaration, the Articles, Bylaws or any other enabling documentation, excluding amendments to add phases, while Developer is in control of the Association must be approved by the Administration of Veteran Affairs.

28.8. Amendments Regarding Tenants

Any amendment to any of the Neighborhood Documents granting the Association or the Board the right to approve or in any manner screen tenants or purchasers of any Home Owner must first be approved by a majority of the Board and three-fourths (3/4) of all Home Owners (at a duly called meeting of the Home Owners at which a quorum is present).

28.9. Neighborhood Documents and Community Documents

The Articles, Bylaws and other Neighborhood Documents shall be amended as provided in such documents. The Community Declaration, Articles of Incorporation of the Community Association and Bylaws of the Community Association shall be amended as provided in the respective Community Documents.

28.10. Form of Amendment

To the extent required by the Act, no provision of this Declaration shall be revised or amended by reference to its title or number only and proposals to amend existing provisions of this Declaration shall contain the full text of the provision to be amended; new words shall be inserted in the text and underlined; and words to be deleted shall be lined through with hyphens; provided, if however, the proposed change is so extensive that this procedure would hinder rather than assist the understanding of the proposed amendment, it is not necessary to use underlining and hyphens as indicated for words added or deleted, but, instead a notation shall be inserted immediately preceding the proposed amendment in substantially the following language: "Substantial Rewording of Declaration. See provision ____ for present text." Notwithstanding anything herein contained to the contrary, however, failure to comply with the above format shall not be deemed a material error or omission in the amendment process and shall not invalidate an otherwise properly promulgated amendment.

29. PROVISIONS SETTING FORTH THE RIGHTS OF DEVELOPER

29.1. Developer's Right to Transact Business

Developer reserves and shall have the right to enter into and transact on the Condominium Property and other portions of Bay Pointe at Bonita Bay any business necessary to consummate the sale, lease or encumbrance of Homes including the right to maintain models and a sales and/or leasing office, place signs, employ sales personnel, hold promotional parties, use the Common Elements, Association Property and show Homes and including the right to carry on construction activities of all types necessary to construct all improvements in Bay Pointe at Bonita Bay pursuant to the plan for development as set forth in Article 10 hereof. Any such models, sales and/or leasing office, signs and any other items pertaining to such sales and/or leasing efforts shall not be considered a part of the Common Elements and shall remain the property of Developer. Developer reserves the right for itself and any of its affiliates to utilize the models for other communities located in Bonita Bay, as Developer and/or any of Developer's affiliates as developers of other communities in Bonita Bay may so determine, in their sole discretion.

29.2. Assignment

This Article 29 may not be suspended, superseded or modified in any manner by any amendment to the Declaration, unless such amendment is consented to in writing by Developer. This right of use and transaction of business as set forth in Article 29 may be assigned in writing by Developer in whole or in part.

30. GENERAL PROVISIONS

30.1. Withdrawal Notice and Other Homes

OR2801 PG0843

30.1.1. Rights of Developer. Nothing contained in this Declaration shall be deemed to prohibit Developer from developing any condominium units, other than the Homes within the Condominium ("Other Homes"), upon any portion of any Subsequent Phase with respect to which Developer has recorded amongst the Public Records a Withdrawal Notice.

30.1.2. Rights of Home Owners of Other Homes to Use "Common Areas", Association Property and Easements Created for Access. In the event that Developer constructs Other Homes, the owners of such Other Homes ("Other Home Owners") and their family members, guests, invitees, and lessees may have as an appurtenance to and a covenant running with such Other Homes: (i) the right to use and enjoy any landscaped areas, walks, drives, parking areas, other facilities and improvements, including, but not limited to, the real property and all improvements which comprise the Association Property in the same manner and with the same privileges as Home Owners have or may have from time to time; (ii) a perpetual nonexclusive easement over, across and through the Association Property for the use and enjoyment thereof and from and to public ways, including dedicated streets; and (iii) the right to use and enjoy the "Common Areas." Home Owners shall have a similar perpetual nonexclusive easement for ingress and egress and access to, over and across the walks and other rights-of-way located upon the portion of the Land covered by a Withdrawal Notice from and to public ways, including dedicated streets and the Association Property subject to rules and regulations established by the Association governing the use and enjoyment of such easements. The Association shall not establish any rule or regulation with respect to the use and enjoyment of the Association Property or the easements created by this Paragraph 30.1.2 which do not apply uniformly to the Home Owners, Other Home Owners and their respective family members, guests, invitees and lessees. The Association Property referred to in this Paragraph 30.1 shall consist of Tracts 1 through 4, as depicted on the Site Plan, in the event that Developer does not close on the purchase of the remaining portions of the Land. If and to the extent Developer closes on the remaining portions of the Land in accordance with the Contract, the Association Property shall include Tracts 1 through 10, as depicted on the Site Plan, in addition to the initial Association Property.

30.1.3. Obligations of Other Homes. In the event that Developer develops Other Homes, the Association shall itemize separately in the annual budget of the Association and all adjustments and revisions thereto, the expenses ("Other Home Expenses") anticipated to be incurred by the Association to administer, operate, maintain, repair, and improve the Association Property including, but not limited to, the cost and expense of any taxes and insurance which can be determined as applicable solely to the Association Property. The Other Home Expenses shall be assessed equally among all existing Homes and the "Other Homes Subject to Neighborhood Assessment" (as hereinafter defined). Each Home's share of the Other Home Expenses shall be the product of the multiplication of the Other Home Expenses multiplied by a fraction, the numerator of which is one (1) and the denominator of which is the "Total Homes" (as hereinafter defined). Each Other Home Subject to Neighborhood Assessment shall also be responsible for its proportionate share of any expense with respect solely to the Association Property which would be subject to a Special Assessment against Homes. "Other Homes Subject to Neighborhood Assessment" shall mean the total number of Other Homes developed from time to time on any portion of the Land originally intended to be a Subsequent Phase with respect to which the Developer has recorded amongst the Public Records a Withdrawal Notice and to which Developer has granted the right to use the improvements located upon the Association Property, which shall become subject to assessment as provided in Paragraph 30.1 upon the recording amongst the Public Records of a declaration of condominium submitting such Other Homes to the condominium form of ownership. "Total Homes" as used herein shall mean the sum of the number of Homes within the Condominium and the number of Other Homes Subject to Neighborhood Assessment as determined from time to time. In the event of condemnation of any Other Homes Subject to Neighborhood Assessment, assessments against such Other Units Subject to Neighborhood Assessment shall be reduced or eliminated on the same basis as Assessments shall be reduced or eliminated with respect to Homes.

30.1.4. Liens upon Other Homes. There shall be a charge on and continuing lien upon all Other Homes Subject to Neighborhood Assessment against which assessment is made as provided in Paragraph 30.1 which shall be subject to all provisions herein to which Homes are

OR2801 PG0844

subject, including, but not limited to, the rights of foreclosure of Other Homes Subject to Neighborhood Assessment and such right shall be set forth in the documents establishing the Other Homes.

30.1.5. Conflict with Other Provisions. The matters set forth in Paragraphs 30.1.2, 30.1.3 and 30.1.4 shall only become applicable if, as and when Developer develops Other Homes, and, in such event, shall control in the event of any conflict between the terms and provisions of such Paragraphs 30.1.2, 30.1.3 and 30.1.4 and the terms and provisions of any other Paragraphs in this Declaration (other than those pertaining to Additional Owner). Amendment of this Article 30 shall require, in addition to any votes or approvals elsewhere required, the written consent of Developer for so long as Developer owns any Homes or Other Homes or any portion of the Land upon which they can be built and by a majority of the Other Home Owners, if any.

OR2801 PG0845

30.1.6. Merger. In the event Developer develops Other Homes, the Association may merge the condominiums operated by the Association by calling a special meeting for such purpose and obtaining the affirmative vote of seventy-five percent (75%) of the owners in each such condominium.

30.1.7. Lands of Additional Owner. The provisions of this Paragraph 30.1 (and all subparagraphs thereof) shall not in any manner apply to portions of the Land as to which Additional Owner files a Withdrawal Notice pursuant to Paragraph 7.2.

30.2. Severability

Invalidation of any one of these covenants or restrictions or of any of the terms and conditions herein contained shall in no way affect any other provisions which shall remain in full force and effect.

30.3. Rights of Mortgagees

30.3.1. Right to Notice. The Association shall make available for inspection upon request, during normal business hours or under reasonable circumstances, the Neighborhood Documents and the books, records and financial statements of the Association to Home Owners, prospective purchasers and the holders, insurers or guarantors of any first mortgages encumbering Homes. In addition, evidence of insurance shall be issued to each Home Owner and mortgagee holding a mortgage encumbering a Home upon written request to the Association.

30.3.2. Rights of Listed Mortgagee. Upon written request to the Association, identifying the name and address of the Listed Mortgagee of a mortgage encumbering a Home and the legal description of such Home, the Association shall provide such Listed Mortgagee with timely written notice of the following:

30.3.2.1. Any condemnation, loss or casualty loss which affects any material portion of the Condominium or any Home encumbered by a first mortgage held, insured or guaranteed by such Listed Mortgagee;

30.3.2.2. Any lapse, cancellation or material modification of any insurance policy or fidelity bond maintained by the Association;

30.3.2.3. Any proposed action which would require the consent of mortgagees holding a mortgage encumbering a Home; and

30.3.2.4. Any failure by a Home Owner owning a Home encumbered by a mortgage held, insured or guaranteed by such Listed Mortgagee to perform his or her obligations under the Neighborhood Documents, including, but not limited to, any delinquency in the payment of Annual Assessments or Special Assessments, or any other charge owed to the Association by said Home Owner where such failure or delinquency has continued for a period of sixty (60) days.

30.3.3. Right of Listed Mortgagee to Receive Financial Statement. Any Listed Mortgagee shall, upon written request made to the Association, be entitled free of charge to financial statements from the Association for the prior fiscal year and the same shall be furnished within a reasonable time following such request.

30.3.4. Right to Cover Cost. Developer (until the Majority Election Date) and any Listed Mortgagee shall have the right, but not the obligation, jointly or singularly, and at their sole option, to pay any of the Assessments which are in default and which may or have become a charge against any Home. Further, Developer (until the Majority Election Date) and any Listed Mortgagees shall have the right, but not the obligation, jointly or singularly, and at their sole option, to pay insurance premiums or fidelity bond premiums or any New Total Tax on behalf of the Association where, in regard to insurance premiums, the premiums are overdue and where lapses in policies may or have occurred or, in regard to New Total Taxes, where such tax is in default and which may or has become a charge against the Condominium Property. Developer and any Listed Mortgagees paying insurance premiums or any New Total Tax on behalf of the Association as set forth above shall be entitled to immediate reimbursement from the Association plus any costs of collection. including, but not limited to, Legal Fees.

OR2801 PG0846

30.4. Developer Approval of Association Actions

Notwithstanding anything in this Declaration to the contrary, while Developer holds Homes for sale or lease in the ordinary course of business, none of the following actions may be taken without approval in writing by Developer:

(i) Assessment of Developer as a Home Owner for capital improvements; and

(ii) Any action by the Association that would be detrimental to the sale or leasing of Homes by Developer.

The determination as to what actions would be detrimental or what constitutes capital improvements shall be in the sole discretion of Developer; provided, however, that an increase in assessments for Neighborhood Common Expenses without discrimination against Developer shall not be deemed to be detrimental to the sale or lease of Homes.

30.5. Notices

Any notice or other communication required or permitted to be given or delivered hereunder shall be deemed properly given and delivered upon the mailing thereof by United States mail, postage prepaid, to: (i) any Home Owner, at the address of the person whose name appears as the Home Owner on the records of the Association at the time of such mailing and, in the absence of any specific address, at the address of the Home owned by such Home Owner; (ii) the Association, certified mail, return receipt requested, at 4700 Montego Pointe Way, Bonita Springs, Florida 34134, or such other address as the Association shall hereinafter notify Developer and the Home Owners of in writing; and (iii) Developer, certified mail, return receipt requested, at 6702 Lone Oak Blvd., Naples, Florida 34109, or such other address or addresses as Developer shall hereafter notify the Association of in writing, any such notice to the Association of a change in Developer's address being deemed notice to the Home Owners. Upon request of a Home Owner the Association shall furnish to such Home Owner the then current address for Developer as reflected by the Association records.

30.6. No Time-Share Estates

Pursuant to the requirements of Section 718.403(f) of the Act, it is hereby specified that no time share estates will be created with respect to Homes in any Phase.

30.7. Assignment of Developer's Rights

Developer shall have the right to assign, in whole or in part, any of its rights granted under this Declaration.

30.8. Lease

A lessee of a Home shall by execution of a lease, be bound by all applicable terms and provisions of this Declaration and be deemed to, accept his or her leasehold estate subject to this Declaration, agree to conform and comply with all provisions contained herein and allow the lessor or the Association to fulfill all obligations imposed pursuant thereto. Each Home Owner, by his/her acceptance of a deed to a Home thereby assigns to the Association the right to collect rent from any lessee of a Home, in the event such Home Owner is delinquent in paying his/her Neighborhood Common Expenses to the Association. After collecting any such rent, the Association may deduct any late Neighborhood Assessments, Interest and Legal Fees and remit any balance to the Home Owner. All leases must be in writing, and copies of the lease agreement and any amendments thereto shall be delivered to the Association upon execution.

OR2801 PG0847

30.9. Documents

Any person reading this Declaration is hereby put on notice that this Condominium is part of Bonita Bay and, as such, is subject to the Community Declaration, the Unit Thirty-Seven Declaration, and the Easement Agreement, as such documents may be amended from time to time. These documents and all amendments thereto are superior to this Declaration and should be read in conjunction with this Declaration and other Neighborhood Documents.

30.10. Security

The Association may, but shall not be obligated to, maintain or support certain activities within the Condominium designed to make the Condominium safer than it otherwise might be. Developer shall not in any way or manner be held liable or responsible for any violation of this Declaration by any person other than Developer. Additionally, NEITHER DEVELOPER, DECLARANT, THE COMMUNITY ASSOCIATION NOR THE ASSOCIATION MAKE ANY REPRESENTATIONS WHATSOEVER AS TO THE SECURITY OF THE PREMISES OR THE EFFECTIVENESS OF ANY MONITORING SYSTEM OR SECURITY SERVICE. ALL HOME OWNERS AGREE TO HOLD DEVELOPER, DECLARANT, THE COMMUNITY ASSOCIATION AND THE ASSOCIATION HARMLESS FROM ANY LOSS OR CLAIM ARISING FROM THE OCCURRENCE OF ANY CRIME OR OTHER ACT. NEITHER THE ASSOCIATION, DECLARANT, THE COMMUNITY ASSOCIATION, DEVELOPER, ANY SUCCESSOR DECLARANT, NOR ANY SUCCESSOR DEVELOPER SHALL IN ANY WAY BE CONSIDERED INSURERS OR GUARANTORS OF SECURITY WITHIN THE CONDOMINIUM. NEITHER THE ASSOCIATION, DECLARANT, THE COMMUNITY ASSOCIATION, DEVELOPER, ANY SUCCESSOR DECLARANT, NOR ANY SUCCESSOR DEVELOPER SHALL BE HELD LIABLE FOR ANY LOSS OR DAMAGE BY REASON OR FAILURE TO PROVIDE ADEQUATE SECURITY OR INEFFECTIVENESS OF SECURITY MEASURES UNDERTAKEN, IF ANY. ALL HOME OWNERS AND OCCUPANTS OF ANY HOME, AND TENANTS, GUESTS AND INVITEES OF A HOME OWNER, ACKNOWLEDGE THAT THE ASSOCIATION AND ITS BOARD, THE COMMUNITY ASSOCIATION AND ITS BOARD, DEVELOPER, DECLARANT, ANY SUCCESSOR DECLARANT, OR ANY SUCCESSOR DEVELOPER DO NOT REPRESENT OR WARRANT THAT ANY FIRE PROTECTION SYSTEM, BURGLAR ALARM SYSTEM OR OTHER SECURITY SYSTEM, IF ANY, DESIGNATED BY OR INSTALLED ACCORDING TO GUIDELINES ESTABLISHED BY DEVELOPER, DECLARANT, THE COMMUNITY ASSOCIATION, OR THE ASSOCIATION MAY NOT BE COMPROMISED OR CIRCUMVENTED, THAT ANY FIRE PROTECTION OR BURGLAR ALARM SYSTEMS OR OTHER SECURITY SYSTEMS OR OTHER SECURITY SYSTEMS WILL IN ALL CASES PROVIDE THE DETECTION OR PROTECTION FOR WHICH THE SYSTEM IS DESIGNED OR INTENDED. EACH HOME

OWNER AND OCCUPANT OF ANY HOME AND EACH TENANT, GUEST AND INVITEE OF A HOME OWNER, ACKNOWLEDGES AND UNDERSTANDS THAT THE ASSOCIATION, ITS BOARD, THE COMMUNITY ASSOCIATION AND ITS BOARD, DECLARANT AND ANY SUCCESSOR DECLARANT, DEVELOPER, OR ANY SUCCESSOR DEVELOPER ARE NOT INSURERS AND THAT EACH HOME OWNER AND OCCUPANT OF ANY HOME AND EACH TENANT, GUEST AND INVITEE OF A HOME OWNER ASSUMES ALL RISKS FOR LOSS OR DAMAGE TO PERSONS, TO HOMES AND TO THE CONTENTS OF HOMES AND FURTHER ACKNOWLEDGES THAT THE ASSOCIATION, ITS BOARD, THE COMMUNITY ASSOCIATION AND ITS BOARD, DECLARANT AND ANY SUCCESSOR DECLARANT, DEVELOPER, OR ANY SUCCESSOR DEVELOPER HAVE MADE NO REPRESENTATIONS OR WARRANTIES NOR HAS ANY HOME OWNER OR OCCUPANT OF ANY HOME, OR ANY TENANT, GUEST OR INVITEE OF A HOME OWNER RELIED UPON ANY REPRESENTATIONS OR WARRANTIES, EXPRESSED OR IMPLIED, INCLUDING ANY WARRANTY OR MERCHANTABILITY OR FITNESS FOR ANY PARTICULAR PURPOSE, RELATIVE TO ANY FIRE AND/OR BURGLAR ALARM SYSTEMS OR OTHER SECURITY SYSTEMS RECOMMENDED OR INSTALLED, IF ANY, OR ANY SECURITY MEASURES UNDERTAKEN WITHIN THE CONDOMINIUM, IF ANY.

OR2801 PG0848

31. PROVISIONS RELATING TO TERMINATION

31.1. Survival of Certain Obligations and Restrictions

In the event the Condominium is terminated in accordance with and pursuant to the provisions of this Declaration, or if such provisions shall not apply for any reason pursuant to law, Developer declares, and all Home Owners by taking title to a Home covenant and agree, that the documents providing for such termination shall require: (i) that any improvements upon what now comprises or hereafter shall comprise the Condominium Property shall be for residential use only and shall contain residential homes of a number not in excess of the number of Homes now or hereafter in the Condominium; and (ii) the Home Owners of the Condominium (as tenants in common of the Condominium Property as set forth in Paragraph 31.3 below) shall remain obligated to pay their share of the Neighborhood Common Expenses and expenses due the Community Association, which will continue to be allocated to the Condominium Property in the manner provided in the Neighborhood Documents as fully as though the Condominium were never terminated, and the obligation to make such payments shall be enforceable by all of the remedies provided for in this Declaration, including a lien on the real property previously included in the Condominium, including the portion now designated as Homes.

31.2. Manner of Termination

This Declaration may be terminated by the affirmative written consent of Home Owners owning eighty percent (80%) of the Homes then part of the Condominium and the written consent of all Listed Mortgagees then holding mortgages encumbering Homes in the Condominium; provided, however, that the Board consents to such termination by a vote of three-fourths (3/4) of the entire Board taken at a special meeting called for that purpose shall also be required; and also provided that, for so long as Developer owns a Home or has the right to add a Subsequent Phase to the Condominium, Developer must consent in writing to such termination.

31.3. Ownership of Common Elements

In the event of the termination of the Condominium, the Condominium Property shall be deemed removed from the provisions of the Act and shall be owned in common by the Home Owners, pro rata, in accordance with the percentage each Home Owner shares in the Common Elements, as provided in this Declaration; provided, however, each Home Owner shall continue to be responsible and liable for his or her share of the Neighborhood Common Expenses under the Declaration and Community Declaration, and any and all lien rights provided for in this Declaration or elsewhere shall continue to run with the real property designated herein as Condominium Property and shall encumber the respective percentage shares of the Home Owners thereof as tenants in common.

IN WITNESS WHEREOF, Developer has caused these presents to be duly executed this ____ day of February, 1997.

WITNESSES:

CENTEX REAL ESTATE CORPORATION
a Nevada corporation

By: _____
TIMOTHY J. RUEMLER, Division President

Printed Name

Attest: _____
MIKE MCLEOD, Secretary

Printed Name

(CORPORATE SEAL)

OR2801 PG0849

STATE OF FLORIDA
COUNTY OF COLLIER

The foregoing instrument was acknowledged before me this 28th day of February, 1997, by TIMOTHY J. RUEMLER and MIKE McLEOD, the Division President and Secretary respectively of CENTEX REAL ESTATE CORPORATION, a Nevada corporation on behalf of the corporation, who are personally known to me. They affixed thereto the seal of the corporation.

_____
Notary Public

_____
Typed, Printed or Stamped Notary Name

My Commission Expires:

OFFICIAL NOTARY SEAL
LAURA M WEISS
NOTARY PUBLIC STATE OF FLORIDA
COMMISSION NO. CC370469
MY COMMISSION EXP. MAY 5,1998

EXHIBIT A
TO
DECLARATION OF CONDOMINIUM
OF
BAY POINTE AT BONITA BAY, A CONDOMINIUM

Legal Description of the Land

Please refer to the legal descriptions for Phases A through Z and Tracts 1 through 10 of Bay Pointe at Bonita Bay, a Condominium, which are part of Exhibit B hereof, which in the aggregate comprise the Land.

OR2801 PG0850

EXHIBIT B
DECLARATION OF CONDOMINIUM
OF
BAY POINTE AT BONITA BAY, A CONDOMINIUM

Legal Descriptions and Surveys, Plot Plans
and Graphic Descriptions of Improvements
for Phases A through Z, and Tracts 1-10

OR2801 PG0851

BAY POINTE AT BONITA BAY, A CONDOMINIUM
SURVEY NOTES

OR2801 PG0852

1. DESCRIPTION OF HOMES

Each Home shall consist of that part of the building containing such Home which lies within the boundaries of the Home, which boundaries are as follows:

A. Upper Boundaries

1. The upper boundary of first-floor Homes shall be horizontal plane of the lowest surface of the unfinished ceiling slab of the Home and the horizontal plane of the unfinished horizontal plane of the lowest surface of the unfinished lanai ceiling slab extended to an intersection with the perimetrical boundaries.

2. The upper boundary of the second story Homes shall be the sloped and horizontal planes of the unfinished ceiling extended to an intersection with each other and with the perimetrical boundaries.

3. The upper boundary of the portion of the Homes comprising the lanai shall be the plane of the lowest surface of the unfinished lanai ceiling.

B. Lower Boundaries

The lower boundary of all Homes shall be horizontal plane of the unfinished floor slab of that Home and the horizontal plane of the unfinished lanai slab extended to an intersection with the perimetrical boundaries.

C. Perimetrical Boundaries

The perimetrical boundaries of a Home shall be the following boundaries extended to an intersection with upper and lower boundaries:

1. EXTERIOR BUILDING WALLS:

The intersecting vertical plane(s) of the innermost unfinished surfaces of the exterior wall of the building bounding such Home and as to the lanai which is part of a Home, such boundaries shall be the intersecting vertical planes which include all of such structures.

2. INTERIOR BUILDING WALLS:

The vertical planes of the innermost unfinished surface of the party walls dividing such Homes extended to intersections with other perimetrical boundaries.

D. Apertures

Where there are apertures in any boundary, including, but not limited to, windows and doors, such boundaries shall be extended to include the interior, unfinished surfaces of such apertures, including all frameworks thereof, exterior surfaces made of glass or other transparent materials, exterior doors or any type, including the locks, hinges and other hardware thereof, and all framings and casings thereof shall be included in the boundaries of the Home.

E. Air Conditioning Units

The boundaries of each Home shall also be deemed to include all integral parts of the air conditioning unit located within the Home.

F. Excluded from Homes

The Home shall not be deemed to include utility services which may be contained within the boundaries of the Home, but which are utilized to serve Common Elements and/or a Home or Homes other than or in addition to the Home within which contained. Such utility services are not Common Elements, but may be the maintenance responsibility of the Association. The Home shall not be deemed to include columns or partitions contributing to the support of the building. Such columns or partitions are part of the Common Elements.

OR2801 PG0853

2. DESCRIPTION OF COMMON ELEMENTS

A. All land and all portions of the Condominium Property not within a Home or Homes are parts of the Common Elements.

B. All bearing walls to the unfinished surface of said walls located within a Home and all columns or partitions contributing to support of the Building constitute parts of the Common Elements.

C. The Common Elements are subject to certain easements set forth in Article 12 of the Declaration of Condominium.

D. Each Entrance Area, Entrance Court and Driveway so designated on the Survey is a Limited Common Element reserved for the use of the Owner of the Home adjacent thereto or as otherwise indicated on the Survey.

E. Each A/C land so designated on the survey is a Limited Common Element reserved for the use of the Home adjacent thereto or as otherwise indicated on the survey.

F. The definitions set forth in the Declaration of Condominium are incorporated herein.

3. BEARING BASIS

A. Bearings shown hereon are based upon fixing the Northerly boundary of Bonita Bay Unit 31 -Phase 1, as N89^39'35".

4) ELEVATIONS

A. Elevations shown hereon are based upon NGVD 1929

EXHIBIT A

LEGAL DESCRIPTION
BAY POINTE AT BONITA BAY, A CONDOMINIUM
PHASE A

A portion of Sections 29 and 32 , Township 47 South, Range 25 East, Lee County, Florida being more particularly described as follows:

Commence at the Northeast corner of "Bonita Bay Unit Thirty-One, Phase I", as shown in the Public Records of Lee County, Florida, in Plat Book 56, Page 9; thence N52°45'24"W a distance of 179.74 feet to the **Point of Beginning**; thence N09°01'45"E a distance of 230.85 feet to a point lying on the arc of a non-tangent circular curve concave to the south; thence easterly along the arc of said curve, having for its elements, a radius of 477.50 feet, a central angle of 4°12'58", a chord distance of 35.13 feet, a chord bearing of S87°42'29"E, an arc distance of 35.14 feet to a point of compound curvature of a tangent circular curve concave to the south; thence easterly along the arc of said curve, having for its elements, a radius of 187.50 feet, a central angle of 18°35'46", a chord distance of 60.59 feet, a chord bearing of S76°18'07"E, an arc distance of 60.86 feet to a point of reverse curvature of a tangent circular curve concave to the north; thence easterly along the arc of said curve, having for its elements, a radius of 212.50 feet, a central angle of 06°32'14", a chord distance of 24.23 feet, a chord bearing of S70°16'21"E, an arc distance of 24.25 feet; thence S73°32'28"E a distance of 8.08 feet to a point of curvature of a circular curve concave to the southwest; thence southeasterly along the arc of said curve, having for its elements, a radius of 25.00 feet, a central angle of 87°21'55", a chord distance of 34.53 feet, a chord bearing of S29°51'30"E, an arc distance of 38.12 feet to a point of reverse curvature of a tangent circular curve concave to the east; thence southerly along the arc of said curve, having for its elements, a radius of 1204.23 feet, a central angle of 05°11'56", a chord distance of 109.23 feet, a chord bearing of S11°13'30"W, an arc distance of 109.27 feet; thence N82°55'29"W a distance of 36.35 feet; thence N32°12'12"W a distance of 20.37 feet; thence N89°51'03"W a distance of 15.76 feet; thence S43°59'20"W a distance of 24.48 feet; thence S44°56'12"W a distance of 22.20 feet; thence S64°24'22"W a distance of 18.65 feet; thence S53°13'08"W a distance of 19.91 feet; thence S27°27'19"E a distance of 20.31 feet; thence S48°52'23"W a distance of 12.12 feet; thence S66°24'25"W a distance of 20.01 feet; thence N85°11'12"W a distance of 10.48 feet to the **Point of Beginning.**

Containing 23943.548 square feet, more or less.

OR2801 PG0854

BAY POINT AT BONITA BAY, A CONDOMINIUM

SURVEY CERTIFICATION

We hereby certify pursuant to Section 718.104(4)(e) F.S. as amended that the construction of the improvements shown on the attached exhibits is substantially complete; so that such material together with the provisions of the Declaration of Condominium of Bay Point at Bonita Bay, A Condominium describing the condominium property is an accurate representation of the locations and dimensions of the improvements and that the identification , location and dimensions of the common elements and of each home can be determined from these materials.

POST, BUCKLEY, SCHUH & JERNIGAN, INC.

Richard L. McCarrier
Registered Land Surveyor #3875
State of Florida

OR2801 PG0855

BAY POINTE AT BONITA BAY, A CONDOMINIUM

MAY 1998

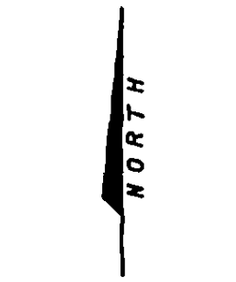

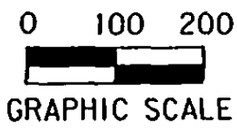

OR2801 PG0856

PBSJ
POST, BUCKLEY, SCHUH & JERNIGAN, INC.
ENGINEERS, PLANNERS & SURVEYORS
6326 PRESIDENTIAL COURT
FORT MYERS, FLORIDA 33919
(941)-482-7275

LOCATION MAP

BAY POINTE AT BONITA BAY, A CONDOMINIUM

MAY 1998

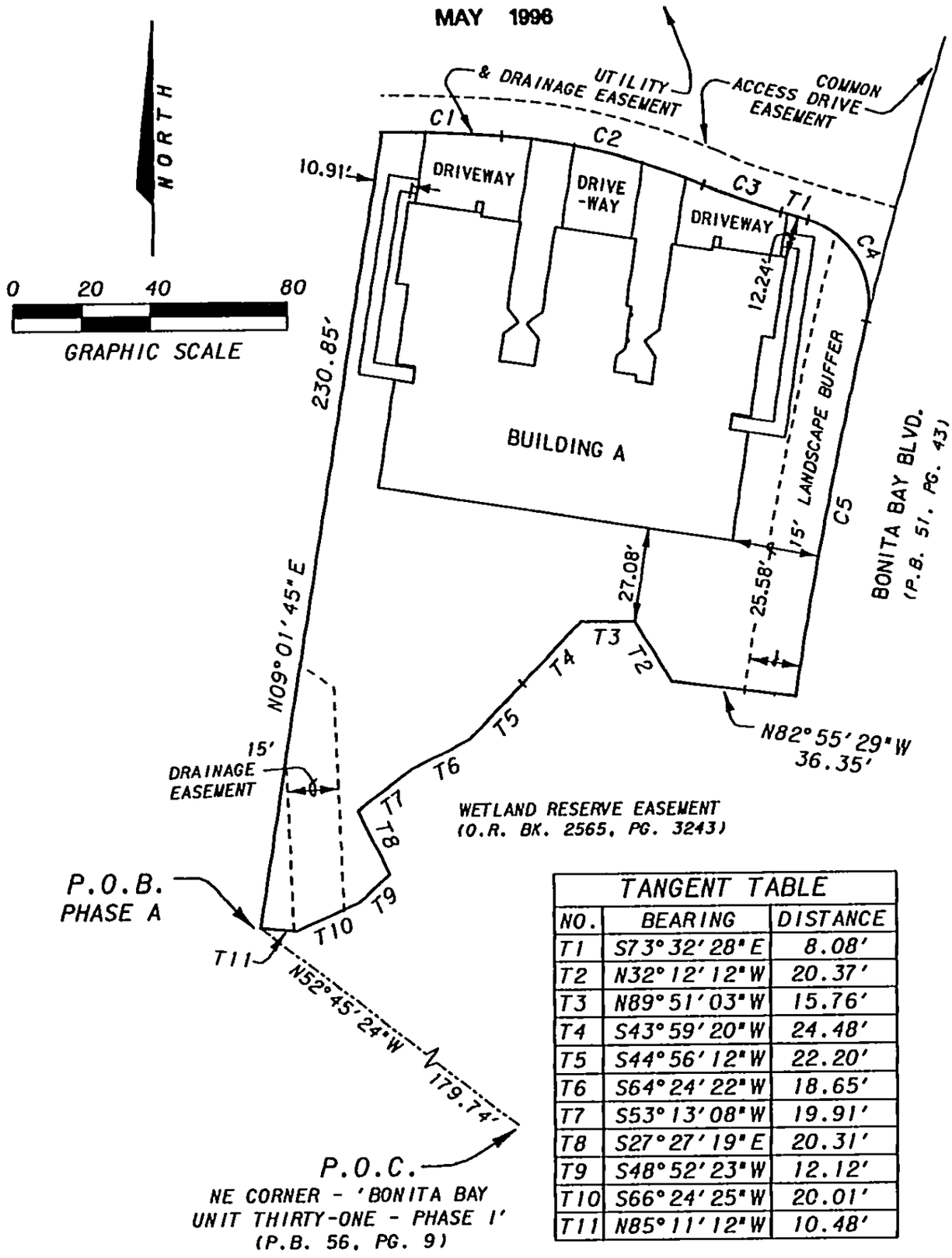

TANGENT TABLE		
NO.	BEARING	DISTANCE
T1	S73°32'28"E	8.08'
T2	N32°12'12"W	20.37'
T3	N89°51'03"W	15.76'
T4	S43°59'20"W	24.48'
T5	S44°56'12"W	22.20'
T6	S64°24'22"W	18.65'
T7	S53°13'08"W	19.91'
T8	S27°27'19"E	20.31'
T9	S48°52'23"W	12.12'
T10	S66°24'25"W	20.01'
T11	N85°11'12"W	10.48'

CURVE TABLE					
NO.	RADIUS	Δ	ARC	CHORD	CHORD BEARING
C1	477.50'	04°12'58"	35.14'	35.13'	S87°42'29"E
C2	187.50'	18°35'46"	60.86'	60.59'	S76°18'07"E
C3	212.50'	06°32'14"	24.25'	24.23'	S70°16'21"E
C4	25.00'	87°21'55"	38.12'	34.53'	S29°51'30"E
C5	1204.23'	05°11'56"	109.27'	109.23'	S11°13'30"W

POST, BUCKLEY, SCHUH & JERNIGAN, INC.
ENGINEERS, PLANNERS & SURVEYORS
6326 PRESIDENTIAL COURT
FORT MYERS, FLORIDA 33919
(941)-482-7275

PHASE A
SURVEY PLOT PLAN

OR2801 PG0857

BAY POINTE AT BONITA BAY, A CONDOMINIUM

MAY 1996

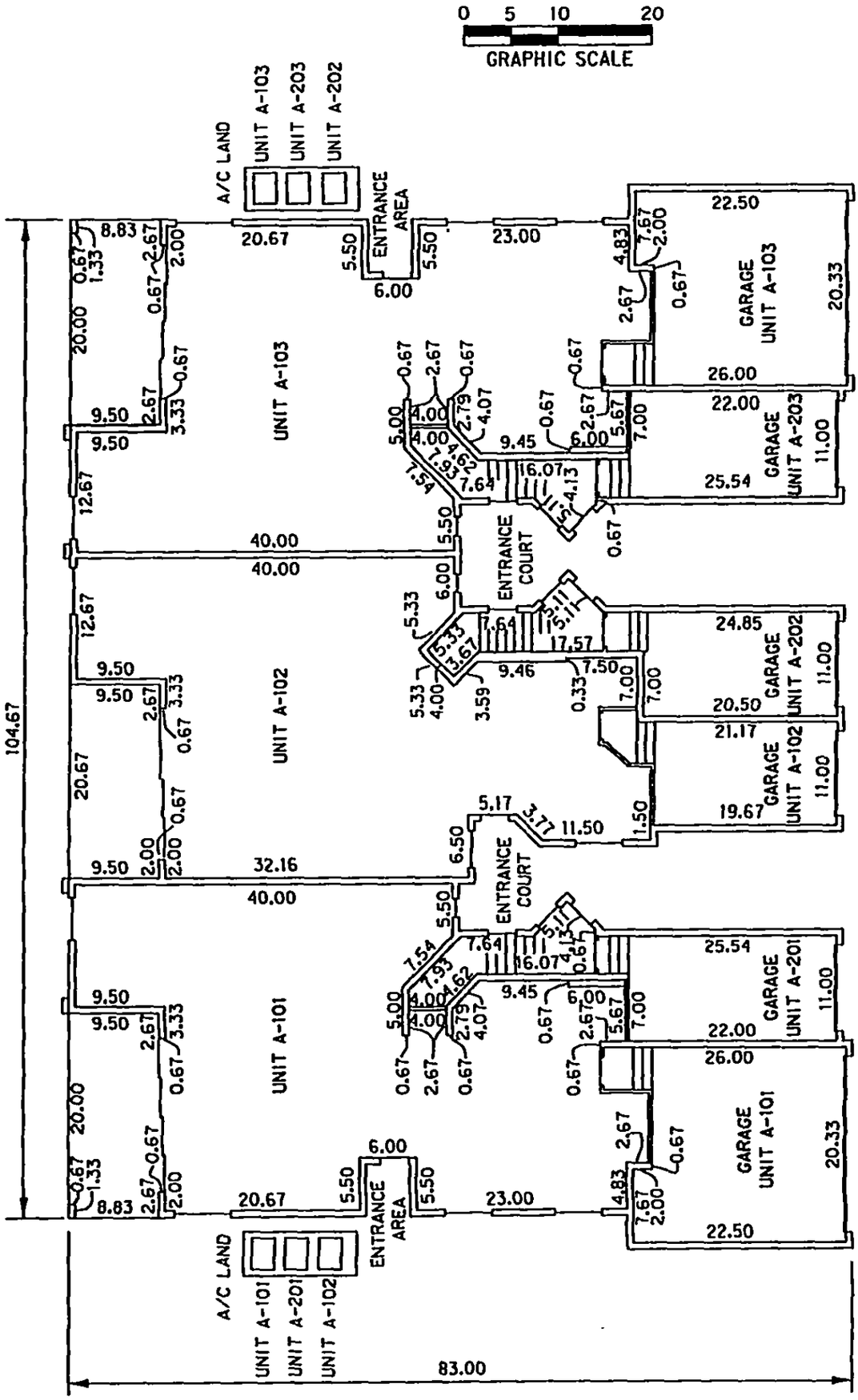

BUILDING A
FIRST FLOOR

	UNIT A-101	UNIT A-102	UNIT A-103	UNIT A-203 GARAGE	UNIT A-202 GARAGE	UNIT A-201 GARAGE	UNIT A-103 GARAGE	UNIT A-102 GARAGE	UNIT A-101 GARAGE
UPPER LIMITS:	20.25	20.25	20.25	20.25	20.25	20.25	20.25	20.25	20.25
LOWER LIMITS:	11.00	11.00	11.00	9.33	9.33	9.33	9.33	9.33	9.33

NOTES: DIMENSIONS SHOWN HEREON ARE IN FEET AND DECIMALS THEREOF.
DIMENSIONS AS SHOWN ARE SUBJECT TO NORMAL CONSTRUCTION TOLERANCES.
IMPROVEMENTS WITHIN THE CONDOMINIUM PROPERTY THAT ARE NOT UNITS OR LIMITED COMMON ELEMENTS ARE COMMON ELEMENTS

PBSJ
POST, BUCKLEY, SCHUH & JERNIGAN, INC.
ENGINEERS, PLANNERS & SURVEYORS
6326 PRESIDENTIAL COURT
FORT MYERS, FLORIDA 33919
(941)-482-7275

PHASE A
SHEET 5 OF 8

2801 PG0858

BAY POINTE AT BONITA BAY, A CONDOMINIUM

MAY 1998

0 5 10 20
GRAPHIC SCALE

OR 2801 PG 0859

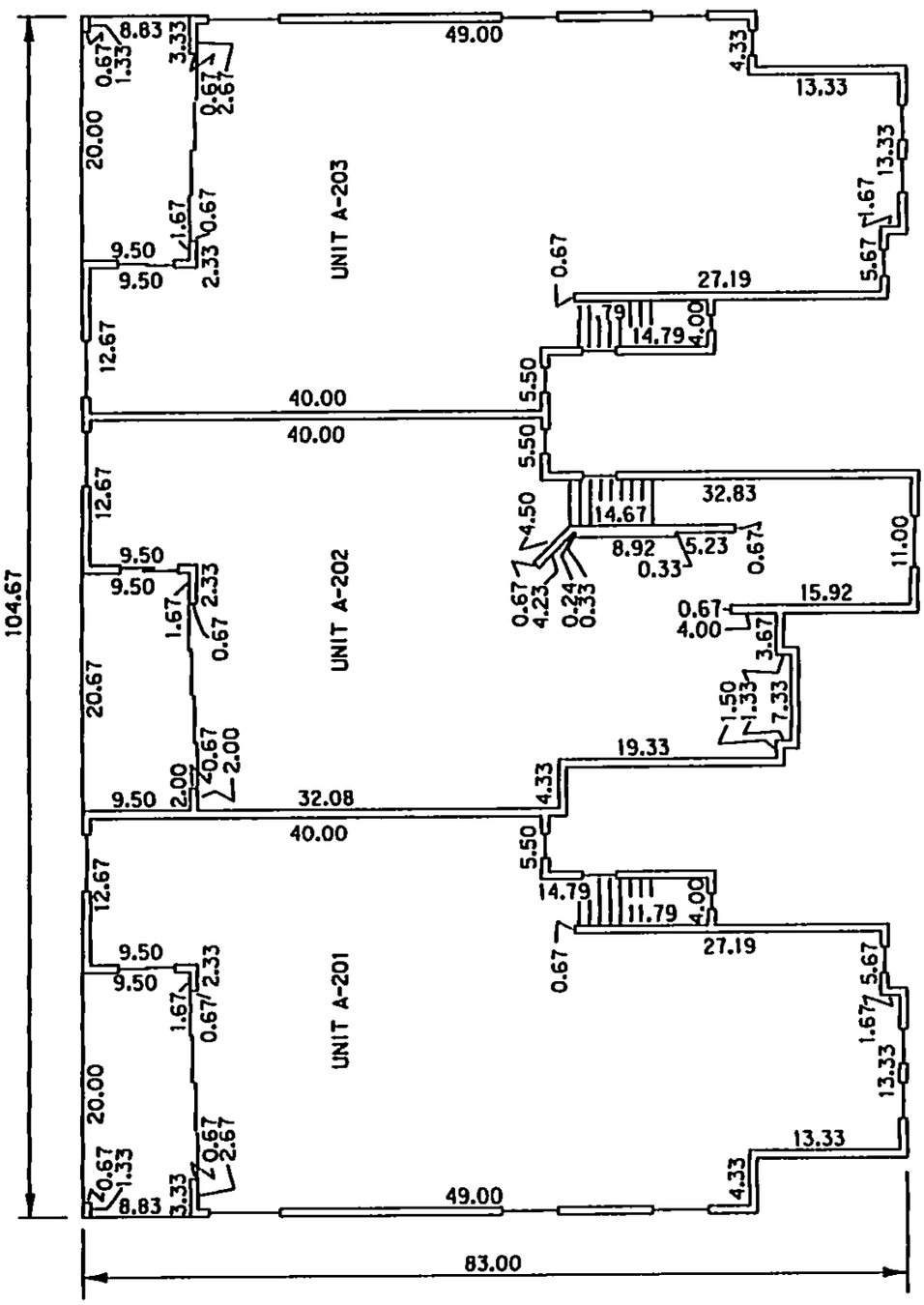

BUILDING A
SECOND FLOOR

	UNIT A-201	UNIT A-202	UNIT A-203
UPPER LIMITS:	31.31	31.31	31.31
LOWER LIMITS:	21.08	21.08	21.08

NOTES: DIMENSIONS SHOWN HEREON ARE IN FEET AND DECIMALS THEREOF.
DIMENSIONS AS SHOWN ARE SUBJECT TO NORMAL CONSTRUCTION TOLERANCES.
IMPROVEMENTS WITHIN THE CONDOMINIUM PROPERTY THAT ARE NOT UNITS OR LIMITED COMMON ELEMENTS ARE COMMON ELEMENTS

PBSJ
POST, BUCKLEY, SCHUH & JERNIGAN, INC.
ENGINEERS, PLANNERS & SURVEYORS
6326 PRESIDENTIAL COURT
FORT MYERS, FLORIDA 33919
(941)-482-7275

PHASE A
SHEET 6 OF 8

BAY POINT AT BONITA BAY, A CONDOMINIUM
SURVEY NOTES

1. DESCRIPTION OF HOMES

Each Home shall consist of that part of the building containing such Home which lies within the boundaries of the Home, which boundaries are as follows:

OR2801 PG0860

A. Upper Boundaries

1. The upper boundary of first-floor Homes shall be horizontal plane of the lowest surface of the unfinished ceiling slab of the Home and the horizontal plane of the unfinished horizontal plane of the lowest surface of the unfinished lanai ceiling slab extended to an intersection with the perimetrical boundaries.

2. The upper boundary of the second story Homes shall be the sloped and horizontal planes of the unfinished ceiling extended to an intersection with each other and with the perimetrical boundaries.

3. The upper boundary of the portion of the Homes comprising the lanai shall be the plane of the lowest surface of the unfinished lanai ceiling.

B. Lower Boundaries

The lower boundary of all Homes shall be horizontal plane of the unfinished floor slab of that Home and the horizontal plane of the unfinished lanai slab extended to an intersection with the perimetrical boundaries.

C. Perimetrical Boundaries

The perimetrical boundaries of a Home shall be the following boundaries extended to an intersection with upper and lower boundaries:

1. EXTERIOR BUILDING WALLS:

The intersecting vertical plane(s) of the innermost unfinished surfaces of the exterior wall of the building bounding such Home and as to the lanai which is part of a Home, such boundaries shall be the intersecting vertical planes which include all of such structures.

2. INTERIOR BUILDING WALLS:

The vertical planes of the innermost unfinished surface of the party walls dividing such Homes extended to intersections with other perimetrical boundaries.

D. Apertures

Where there are apertures in any boundary, including, but not limited to, windows and doors, such boundaries shall be extended to include the interior, unfinished surfaces of such apertures, including all frameworks thereof, exterior surfaces made of glass or other transparent materials, exterior doors or any type, including the locks, hinges and other hardware thereof, and all framings and casings thereof shall be included in the boundaries of the Home.

E. Air Conditioning Units

The boundaries of each Home shall also be deemed to include all integral parts of the air conditioning unit located within the Home.

F. Excluded from Homes

The Home shall not be deemed to include utility services which may be contained within the boundaries of the Home, but which are utilized to serve Common Elements and/or a Home or Homes other than or in addition to the Home within which contained. Such utility services are not Common Elements, but may be the maintenance responsibility of the Association. The Home shall not be deemed to include columns or partitions contributing to the support of the building. Such columns or partitions are part of the Common Elements.

3280 PG 0861

2. DESCRIPTION OF COMMON ELEMENTS

A. All land and all portions of the Condominium Property not within a Home or Homes are parts of the Common Elements.

B. All bearing walls to the unfinished surface of said walls located within a Home and all columns or partitions contributing to support of the Building constitute parts of the Common Elements.

C. The Common Elements are subject to certain easements set forth in Article 12 of the Declaration of Condominium.

D. Each Entrance Area, Entrance Court and Driveway so designated on the Survey is a Limited Common Element reserved for the use of the Owner of the Home adjacent thereto or as otherwise indicated on the Survey.

E. Each A/C land so designated on the survey is a Limited Common Element reserved for the use of the Home adjacent thereto or as otherwise indicated on the survey.

F. The definitions set forth in the Declaration of Condominium are incorporated herein.

3. BEARING BASIS

A. Bearings shown hereon are based upon fixing the Northerly boundary of Bonita Bay Unit 31 - Phase 1, as N89^39'35".

4. ELEVATIONS

A. Elevations shown hereon are based upon NGVD 1929.

LEGAL DESCRIPTION
BAY POINTE AT BONITA BAY, A CONDOMINIUM
PHASE B

A portion of Sections 29 and 32 , Township 47 South, Range 25 East, Lee County, Florida being more particularly described as follows:

Commence at the Northeast corner of "Bonita Bay Unit Thirty-One, Phase I", as shown in the Public Records of Lee County, Florida, in Plat Book 56, Page 9; thence N17°36'16"W a distance of 353.31 feet to the **Point of Beginning;** thence S09°01'45"W a distance of 230.85 feet; thence N78°49'13"W a distance of 10.76 feet; thence N87°46'24"W a distance 21.84 feet; thence N21°02'38"E a distance of 24.02 feet; thence N29°59'54"W a distance of 12.98 feet; thence S27°43'09"W a distance of 20.23 feet; thence N89°22'32"W a distance of 18.53 feet; thence N12°11'41"W a distance of 21.18 feet; thence N14°24'02"W a distance of 11.73 feet; thence N21°39'33"E a distance of 27.08 feet; thence S89°46'15"E a distance of 11.27 feet; thence S88°14'48"E a distance of 11.27 feet; thence N28°30'29"W a distance of 7.77 feet; thence N43°59'50"W a distance of 17.95 feet; thence N48°20'11"W a distance of 17.27 feet; thence S56°33'05"W a distance of 21.13 feet; thence N30°26'59"W a distance of 9.47 feet; thence N08°47'25"E a distance of 135.63 feet; thence S81°12'35"E a distance of 22.14 feet, to a point of curvature of a tangent circular curve concave to the north; thence easterly along the arc of said curve, having for its elements, a radius of 522.50 feet, a central angle of 8°36'23", a chord distance of 78.41 feet, a chord bearing of S85°30'47"E, an arc distance of 78.48 feet to the **Point of Beginning.**

Containing 18911.078 square feet, more or less.

OR2801 PG0862

BAY POINTE AT BONITA BAY, A CONDOMINIUM

MAY 1996

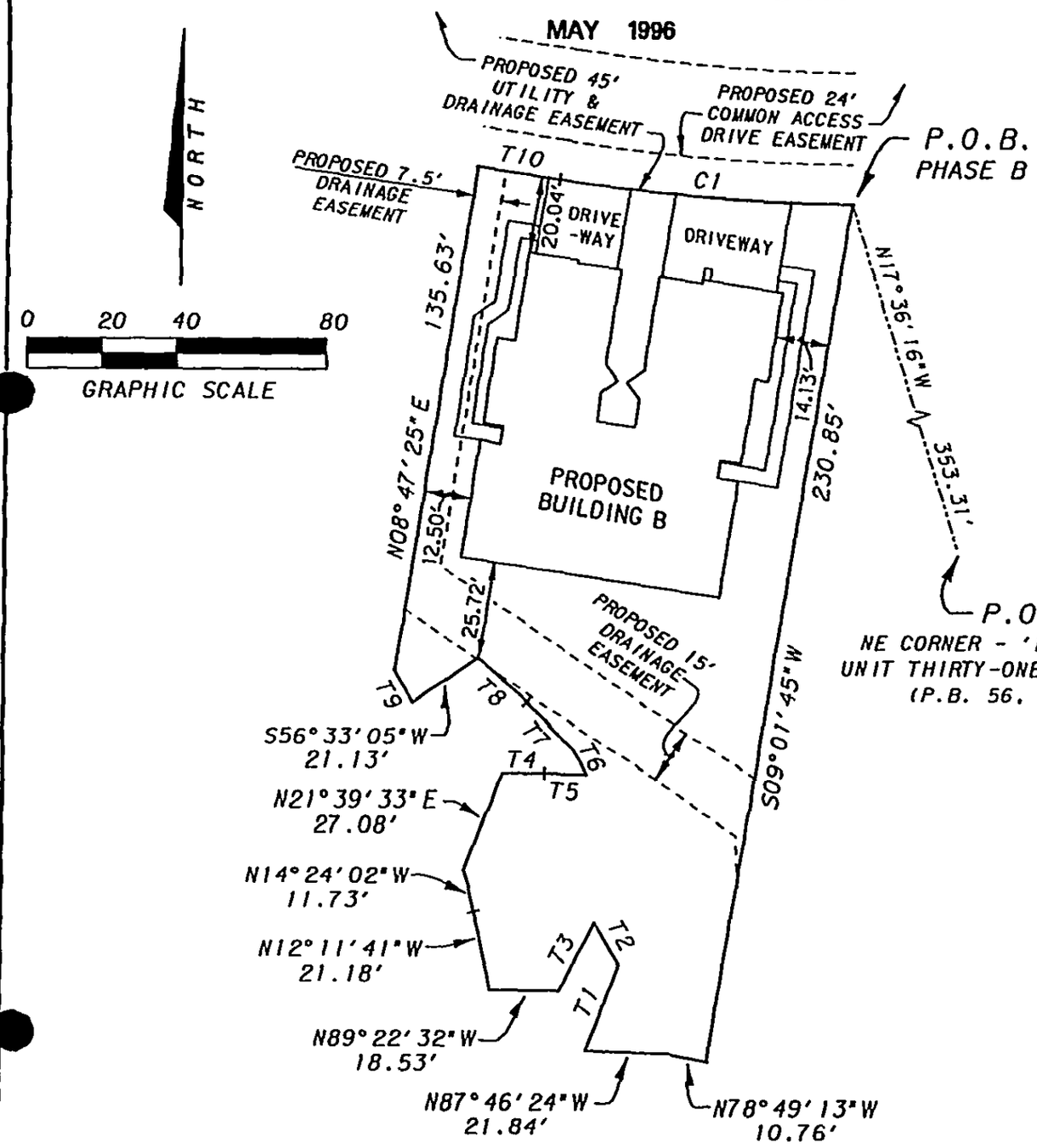

OR2801 PG0863

TANGENT TABLE		
NO.	BEARING	DISTANCE
T1	N21°02'38"E	24.02'
T2	N29°59'54"W	12.98'
T3	S27°43'09"W	20.23'
T4	S89°46'15"E	11.27'
T5	S88°14'48"E	11.27'
T6	N28°30'29"W	7.77'
T7	N43°59'50"W	17.95'
T8	N48°20'11"W	17.27'
T9	N30°26'59"W	9.47'
T10	S81°12'35"E	22.14'

CURVE TABLE					
NO.	RADIUS	Δ	ARC	CHORD	CHORD BEARING
C1	522.50'	08°36'23"	78.48'	78.41'	S85°30'47"E

POST, BUCKLEY, SCHUH & JERNIGAN, INC.
ENGINEERS, PLANNERS & SURVEYORS
6326 PRESIDENTIAL COURT
FORT MYERS, FLORIDA 33919
(941)-482-7275

PHASE B
SURVEY PLOT PLAN

BAY POINTE AT BONITA BAY, A CONDOMINIUM

MAY 1996

0 5 10 20
GRAPHIC SCALE

OR2801 PG0864

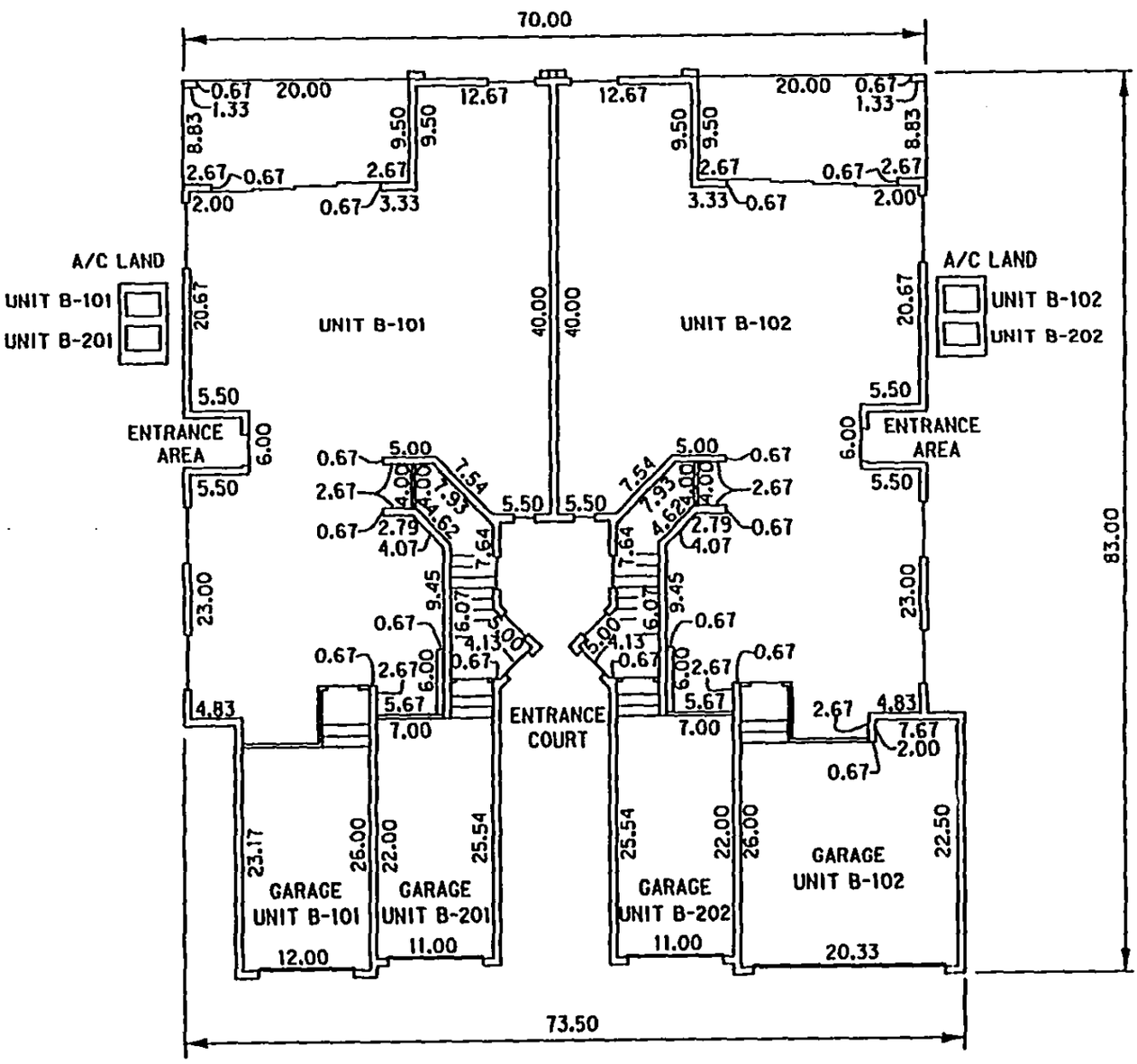

BUILDING B
FIRST FLOOR

	UNIT B-101	UNIT B-101 GARAGE	UNIT B-102	UNIT B-102 GARAGE	UNIT B-201 GARAGE	UNIT B-202 GARAGE
UPPER LIMITS:	20.25	20.25	20.25	20.25	20.25	20.25
LOWER LIMITS:	11.00	9.33	11.00	9.33	9.33	9.33

NOTES: DIMENSIONS SHOWN HEREON ARE IN FEET AND DECIMALS THEREOF.
DIMENSIONS AS SHOWN ARE SUBJECT TO NORMAL CONSTRUCTION TOLERANCES.
IMPROVEMENTS WITHIN THE CONDOMINIUM PROPERTY THAT ARE NOT UNITS OR LIMITED COMMON ELEMENTS ARE COMMON ELEMENTS

PBSJ
POST, BUCKLEY, SCHUH & JERNIGAN, INC.
ENGINEERS, PLANNERS & SURVEYORS
6326 PRESIDENTIAL COURT
FORT MYERS, FLORIDA 33919
(941)-482-7275

BAY POINTE AT BONITA BAY, A CONDOMINIUM

MAY 1998

0 5 10 20
GRAPHIC SCALE

OR2801 PG0865

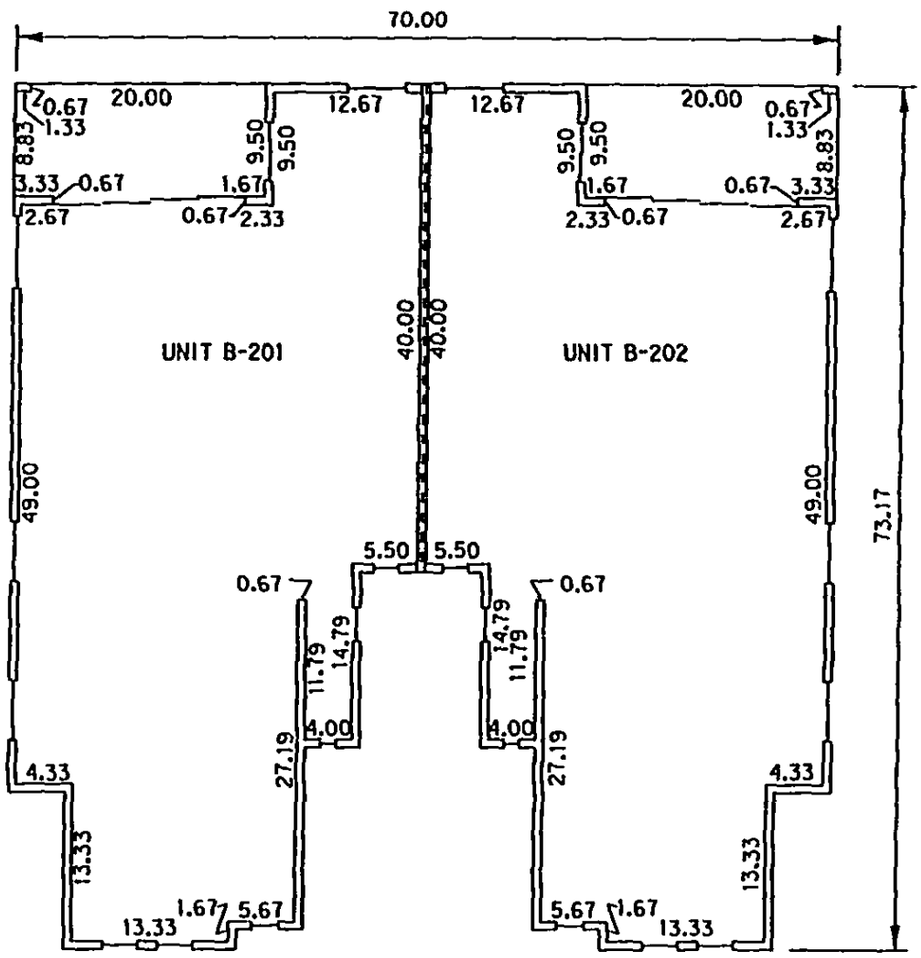

BUILDING B
SECOND FLOOR

	UNIT B-201	UNIT B-202
UPPER LIMITS:	31.31	31.31
LOWER LIMITS:	21.08	21.08

NOTES: DIMENSIONS SHOWN HEREON ARE IN FEET AND DECIMALS THEREOF.
DIMENSIONS AS SHOWN ARE SUBJECT TO NORMAL CONSTRUCTION TOLERANCES.
IMPROVEMENTS WITHIN THE CONDOMINIUM PROPERTY THAT ARE NOT UNITS OR LIMITED COMMON ELEMENTS ARE COMMON ELEMENTS

PBSJ
POST, BUCKLEY, SCHUH & JERNIGAN, INC.
ENGINEERS, PLANNERS & SURVEYORS
6326 PRESIDENTIAL COURT
FORT MYERS, FLORIDA 33919
(941)-482-7275

LEGAL DESCRIPTION
BAY POINTE AT BONITA BAY, A CONDOMINIUM
PHASE C

A portion of Sections 29 and 32 , Township 47 South, Range 25 East, Lee County, Florida being more particularly described as follows:

Commence at the Northeast corner of "Bonita Bay Unit Thirty-One, Phase I", as shown in the Public Records of Lee County, Florida, in Plat Book 56, Page 9; thence N30°51'32"W a distance of 403.39 feet to the **Point of Beginning**; thence S08°47'25"W a distance of 135.63 feet; thence N30°26'59"W a distance of 6.62 feet; thence N88°06'05"W a distance of 28.22 feet; thence S76°32'08"W a distance of 23.28 feet; thence N60°58'42"W a distance of 14.35 feet; thence N56°47'59"W a distance of 17.25 feet; thence N84°56'14"W a distance of 20.67 feet; thence S61°53'05"W a distance of 21.57 feet; thence N79°58'35"W a distance of 2.94 feet to a point on the arc of a non-tangent circular curve concave to the west; thence northerly along the arc of said curve, having for its elements, a radius of 322.50 feet, a central angle of 04°35'43", a chord distance of 25.86 feet, a chord bearing of N05°52'21"E, an arc distance of 25.87 feet; thence N03°34'29"E a distance of 100.35 feet to a point of curvature of a tangent circular curve concave to the southeast; thence northeasterly along the arc of said curve, having for its elements, a radius of 17.50 feet, a central angle of 95°12'56", a chord distance of 25.85 feet, a chord bearing of N51°10'57"E, an arc distance of 29.08 feet; thence S81°12'35"E a distance of 116.75 feet to the **Point of Beginning.**

Containing 17492.550 square feet, more or less.

OR2801 PG0866

BAY POINTE AT BONITA BAY, A CONDOMINIUM

MAY 1996

OR2801 PG0867

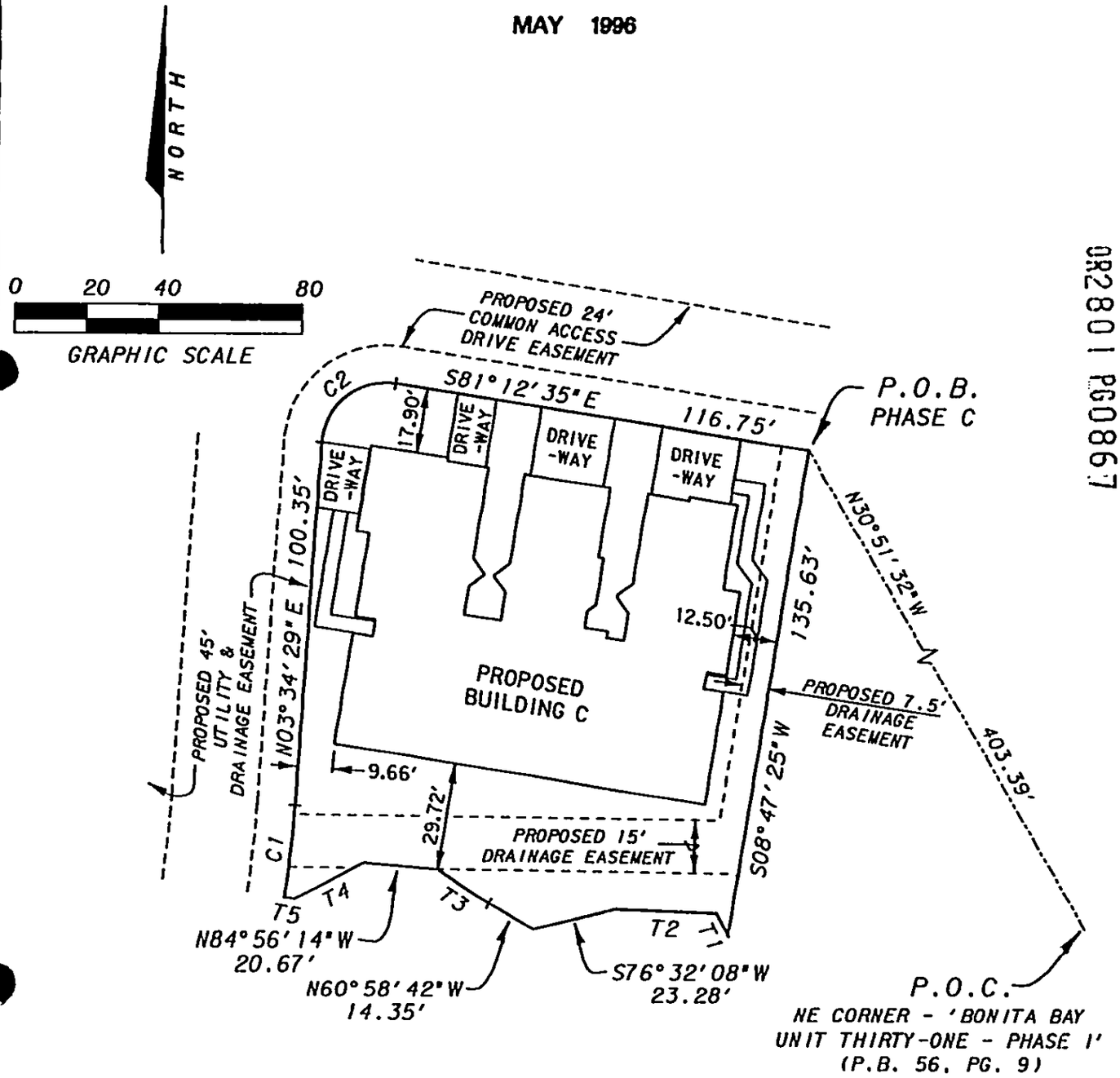

TANGENT TABLE		
NO.	BEARING	DISTANCE
T1	N30°26'59"W	6.62'
T2	N88°06'05"W	28.22'
T3	N56°47'59"W	17.25'
T4	S61°53'05"W	21.57'
T5	N79°58'35"W	2.94'

CURVE TABLE					
NO.	RADIUS	Δ	ARC	CHORD	CHORD BEARING
C1	322.50'	04°35'43"	25.87'	25.86'	N05°52'21"E
C2	17.50'	95°12'56"	29.08'	25.85'	N51°10'57"E

POST, BUCKLEY, SCHUH & JERNIGAN, INC.
ENGINEERS, PLANNERS & SURVEYORS
6326 PRESIDENTIAL COURT
FORT MYERS, FLORIDA 33919
(941)-482-7275

PHASE C
SURVEY PLOT PLAN

BAY POINTE AT BONITA BAY, A CONDOMINIUM

MAY 1998

OR 2801 PG 0868

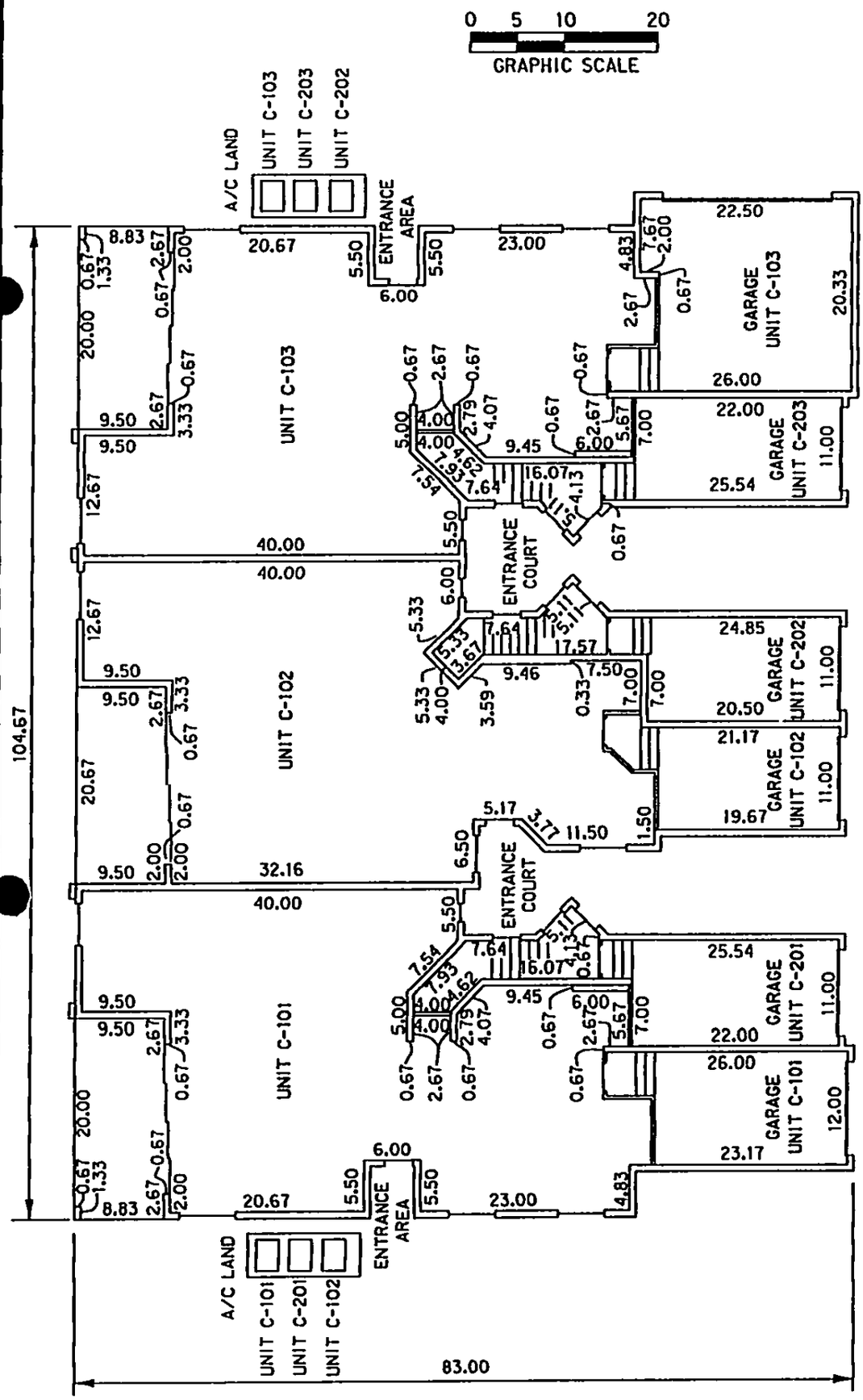

BUILDING C
FIRST FLOOR

	UNIT C-101	UNIT C-101 GARAGE	UNIT C-102	UNIT C-102 GARAGE	UNIT C-103	UNIT C-103 GARAGE	UNIT C-201 GARAGE	UNIT C-202 GARAGE	UNIT C-203 GARAGE
UPPER LIMITS:	20.25	20.25	20.25	20.25	20.25	20.25	20.25	20.25	20.25
LOWER LIMITS:	11.00	9.33	11.00	9.33	11.00	9.33	9.33	9.33	9.33

NOTES: DIMENSIONS SHOWN HEREON ARE IN FEET AND DECIMALS THEREOF.
DIMENSIONS AS SHOWN ARE SUBJECT TO NORMAL CONSTRUCTION TOLERANCES.
IMPROVEMENTS WITHIN THE CONDOMINIUM PROPERTY THAT ARE NOT UNITS OR LIMITED COMMON ELEMENTS ARE COMMON ELEMENTS

PBSJ
POST, BUCKLEY, SCHUH & JERNIGAN, INC.
ENGINEERS, PLANNERS & SURVEYORS
6326 PRESIDENTIAL COURT
FORT MYERS, FLORIDA 33919
(941)-482-7275

BAY POINTE AT BONITA BAY, A CONDOMINIUM

MAY 1996

0 5 10 20
GRAPHIC SCALE

OR2801 PG0869

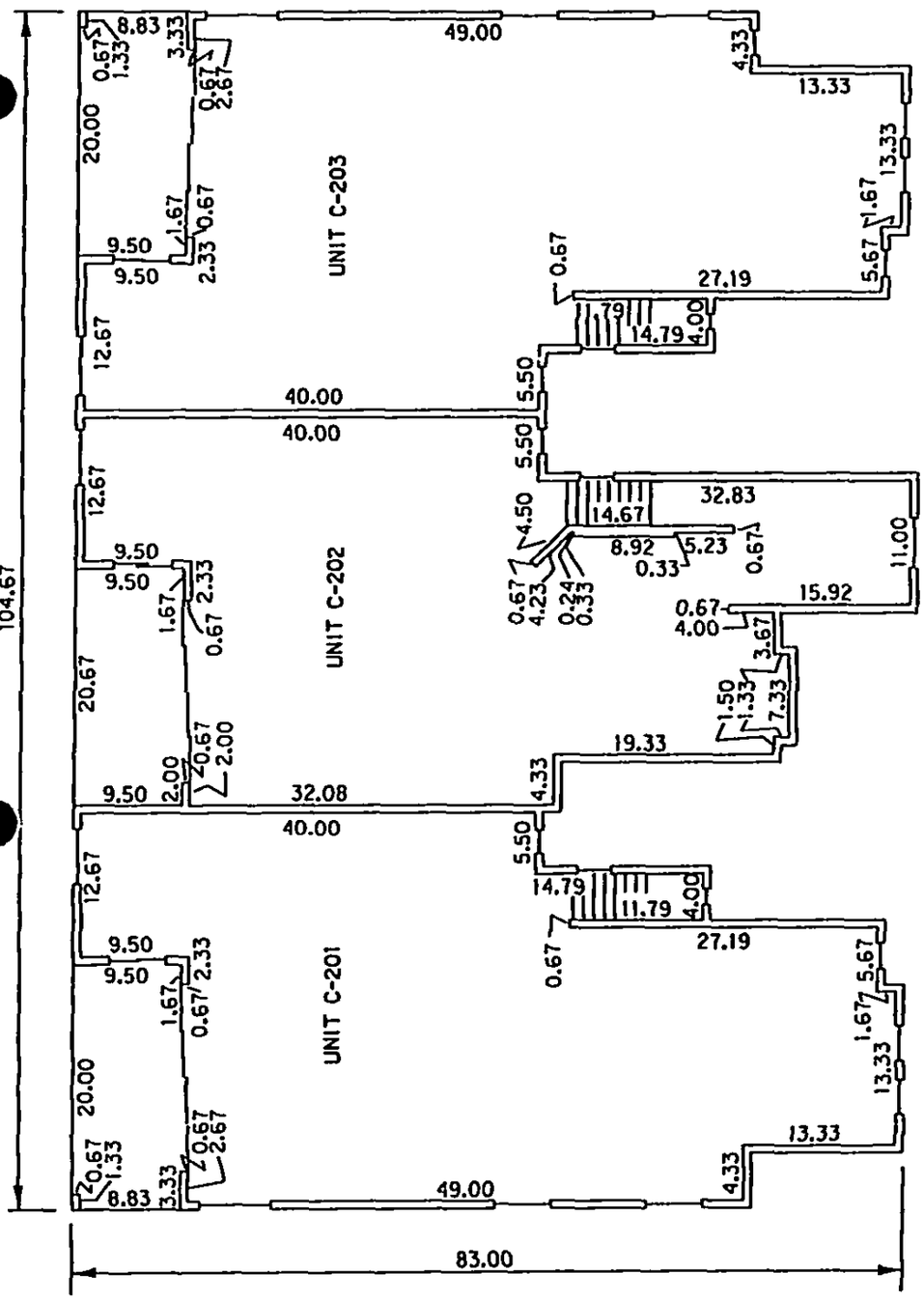

BUILDING C
SECOND FLOOR

	UNIT C-201	UNIT C-202	UNIT C-203
UPPER LIMITS:	31.31	31.31	31.31
LOWER LIMITS:	21.08	21.08	21.08

NOTES: DIMENSIONS SHOWN HEREON ARE IN FEET AND DECIMALS THEREOF.
DIMENSIONS AS SHOWN ARE SUBJECT TO NORMAL CONSTRUCTION TOLERANCES.
IMPROVEMENTS WITHIN THE CONDOMINIUM PROPERTY THAT ARE NOT UNITS OR LIMITED COMMON ELEMENTS ARE COMMON ELEMENTS

PBSJ
POST, BUCKLEY, SCHUH & JERNIGAN, INC.
ENGINEERS, PLANNERS & SURVEYORS
6326 PRESIDENTIAL COURT
FORT MYERS, FLORIDA 33919
(941)-482-7275

PHASE C
SHEET 4 OF 4

LEGAL DESCRIPTION
BAY POINTE AT BONITA BAY, A CONDOMINIUM
PHASE D

OR2801 PG0870

A portion of Sections 29 and 32 , Township 47 South, Range 25 East, Lee County, Florida being more particularly described as follows:

Commence at the Northeast corner of "Bonita Bay Unit Thirty-One, Phase I", as shown in the Public Records of Lee County, Florida, in Plat Book 56, Page 9; thence N86°41'58"W a distance of 512.16 feet to the **Point of Beginning**; thence southeasterly along the arc of a non-tangent circular curve concave to the northeast and, having for its elements, a radius of 57.50 feet, a central angle of 64°57'51", a chord distance of 61.76 feet, a chord bearing of S29°27'30"E, an arc distance of 65.20 feet; thence S28°03'31"W a distance of 12.47 feet; thence S60°21'38"W a distance of 22.73 feet; thence S22°41'56"W a distance of 26.86 feet; thence S00°16'24"E a distance of 20.56 feet; thence S06°12'20"E a distance of 20.01 feet; thence S52°37'40"W a distance of 26.72 feet; thence S43°20'24"W a distance of 49.95 feet; thence S67°26'57"W a distance of 30.51 feet; thence S39°48'27"W a distance of 26.39 feet; thence N45°43'53"W a distance of 18.69 feet; thence S87°33'25"W a distance of 8.08 feet; thence N31°27'49"W a distance of 14.48 feet; thence N68°01'07"W a distance of 19.33 feet; thence N01°15'38"W a distance of 36.77 feet; thence N03°52'45"E a distance of 28.17 feet; thence N07°27'42"E a distance of 50.01 feet; thence N84°02'44"E a distance of 12.19 feet; thence N64°19'35"E a distance of 37.16 feet; thence N72°29'25"E a distance of 27.56 feet; thence N68°18'53"E a distance of 26.87 feet; thence N40°18'38"E a distance of 57.61 feet; thence S86°58'34"E a distance of 9.16 feet to the **Point of Beginning.**

Containing 21768.772 square feet, more or less.

BAY POINTE AT BONITA BAY, A CONDOMINIUM

MAY 1996

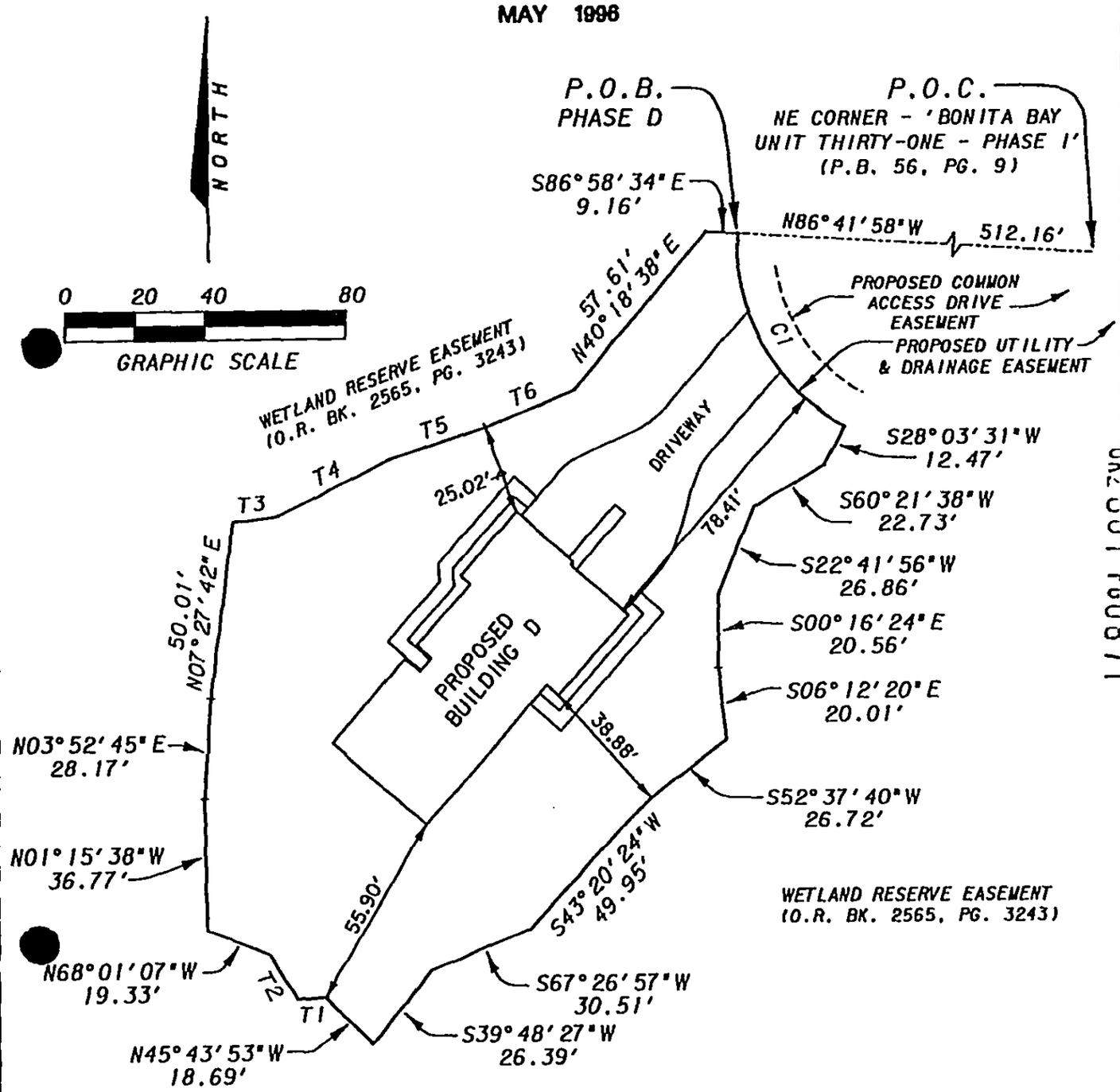

TANGENT TABLE		
NO.	BEARING	DISTANCE
T1	S87°33'25"W	8.08'
T2	N31°27'49"W	14.48'
T3	N84°02'44"E	12.19'
T4	N64°19'35"E	37.16'
T5	N72°29'25"E	27.56'
T6	N68°18'53"E	26.87'

CURVE TABLE					
NO.	RADIUS	Δ	ARC	CHORD	CHORD BEARING
C1	57.50'	64°57'51"	65.20'	61.76'	S29°27'30"E

POST, BUCKLEY, SCHUH & JERNIGAN, INC.
ENGINEERS, PLANNERS & SURVEYORS
6326 PRESIDENTIAL COURT
FORT MYERS, FLORIDA 33919
(941)-482-7275

PHASE D
SURVEY PLOT PLAN

BAY POINTE AT BONITA BAY, A CONDOMINIUM

MAY 1996

0 5 10 20
GRAPHIC SCALE

OR2801 PG0872

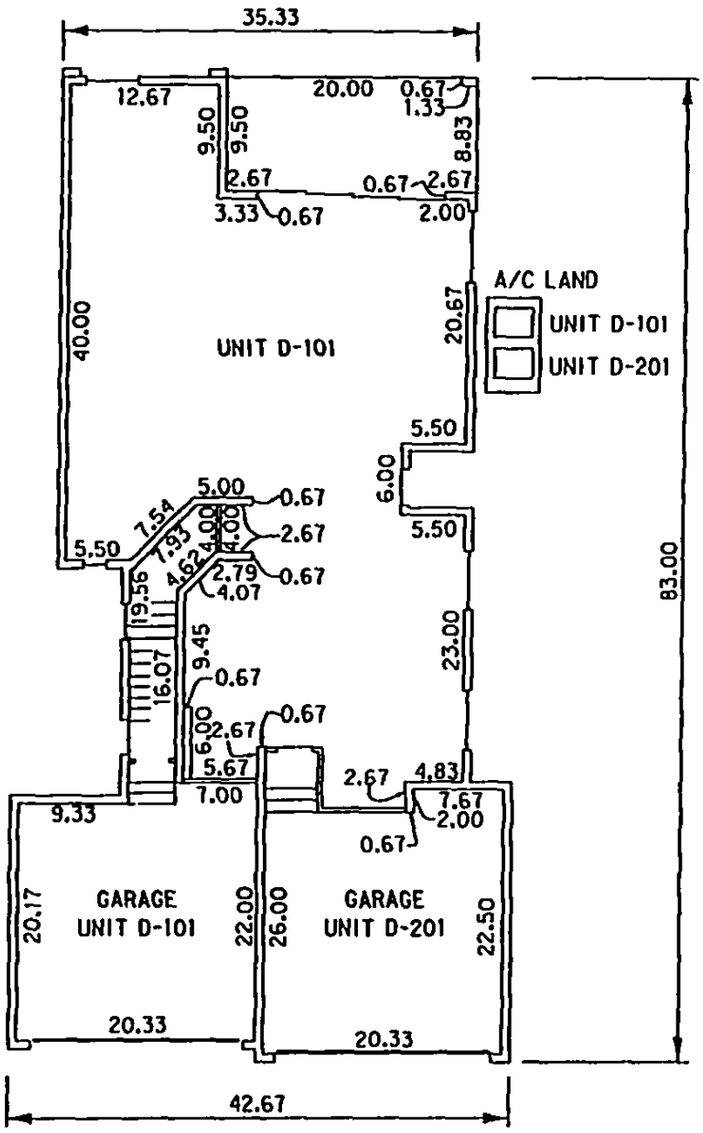

BUILDING D
FIRST FLOOR

	UNIT D-101	UNIT D-101 GARAGE	UNIT D-201 GARAGE
UPPER LIMITS:	20.25	20.25	20.25
LOWER LIMITS:	11.00	9.33	9.33

NOTES: DIMENSIONS SHOWN HEREON ARE IN FEET AND DECIMALS THEREOF.
DIMENSIONS AS SHOWN ARE SUBJECT TO NORMAL CONSTRUCTION TOLERANCES.
IMPROVEMENTS WITHIN THE CONDOMINIUM PROPERTY THAT ARE NOT UNITS OR LIMITED COMMON ELEMENTS ARE COMMON ELEMENTS

PBSJ
POST, BUCKLEY, SCHUH & JERNIGAN, INC.
ENGINEERS, PLANNERS & SURVEYORS
6326 PRESIDENTIAL COURT
FORT MYERS, FLORIDA 33919
(941)-482-7275

BAY POINTE AT BONITA BAY, A CONDOMINIUM

MAY 1996

0 5 10 20
GRAPHIC SCALE

OR2801 PG0873

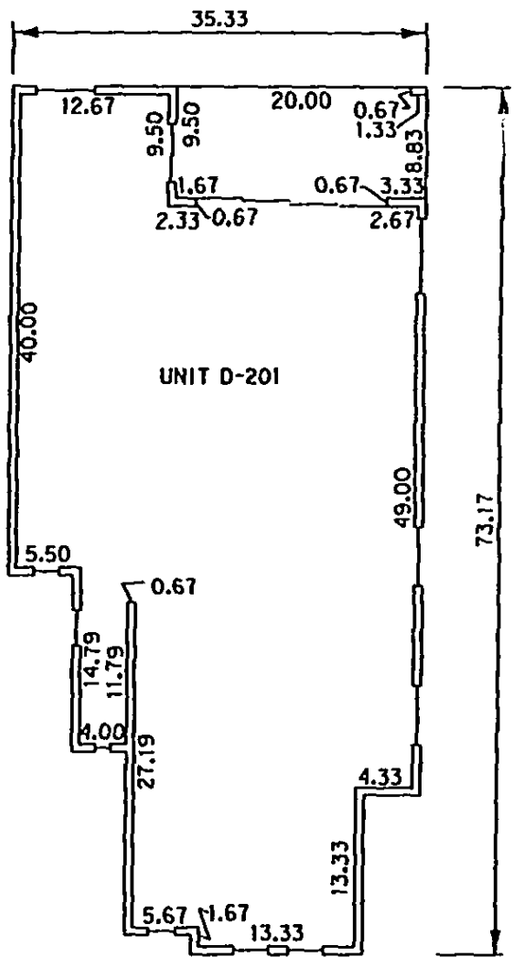

BUILDING D
SECOND FLOOR

	UNIT D-201
UPPER LIMITS:	31.31
LOWER LIMITS:	21.08

NOTES: DIMENSIONS SHOWN HEREON ARE IN FEET AND DECIMALS THEREOF.
DIMENSIONS AS SHOWN ARE SUBJECT TO NORMAL CONSTRUCTION TOLERANCES.
IMPROVEMENTS WITHIN THE CONDOMINIUM PROPERTY THAT ARE NOT UNITS OR LIMITED COMMON ELEMENTS ARE COMMON ELEMENTS

PBSJ
POST, BUCKLEY, SCHUH & JERNIGAN, INC.
ENGINEERS, PLANNERS & SURVEYORS
6326 PRESIDENTIAL COURT
FORT MYERS, FLORIDA 33919
(941)-482-7275

LEGAL DESCRIPTION
BAY POINTE AT BONITA BAY, A CONDOMINIUM
PHASE E

A portion of Sections 29 and 32 , Township 47 South, Range 25 East, Lee County, Florida being more particularly described as follows:

Commence at the Northeast corner of "Bonita Bay Unit Thirty-One, Phase I", as shown in the Public Records of Lee County, Florida, in Plat Book 56, Page 9; thence N60°31'32"W a distance of 455.48 feet to the **Point of Beginning**, said point lying on the arc of a non-tangent circular curve concave to the west; thence southerly along the arc of said curve, having for its elements, a radius of 277.50 feet, a central angle of 02°38'31", a chord distance of 12.79 feet, a chord bearing of S10°23'43"W, an arc distance of 12.80 feet; thence S11°42'58"W a distance of 103.86 feet to a point of curvature of a tangent circular curve concave to the northwest; thence southwesterly along the arc of said curve , having for its elements, a radius of 32.50 feet, a central angle of 79°39'01", a chord distance of 41.63 feet, a chord bearing of S51°32'29"W, an arc distance of 45.18 feet to a point of reverse curvature of a tangent circular curve concave to the southeast; thence southwesterlyalong the arc of said curve, having for its elements, a radius of 57.50 feet, a central angle of 88°20'33", a chord distance of 80.13 feet, a chord bearing of S47°11'42"W, an arc distance of 88.66 feet; thence N86°58'34"W a distance of 9.16 feet; thence N26°28'10"W a distance of 49.03 feet; thence N55°56'00"E a distance of 22.89 feet; thence N28°10'13"W a distance of 20.30 feet; thence N45°54'36"W a distance of 12.23 feet; thence N31°05'55"W a distance of 18.82 feet; thence N05°33'24"E a distance of 42.97 feet; thence N02°16'50"E a distance of 35.27 feet; thence N26°24'37"E a distance of 28.61 feet; thence N28°49'30"W a distance of 11.85 feet; thence S82°21'16"E a distance of 143.62 feet to the **Point of Beginning.**

Containing 21593.327 square feet, more or less.

OR2801 PG0874

BAY POINTE AT BONITA BAY, A CONDOMINIUM

MAY 1996

OR2801 PG0875

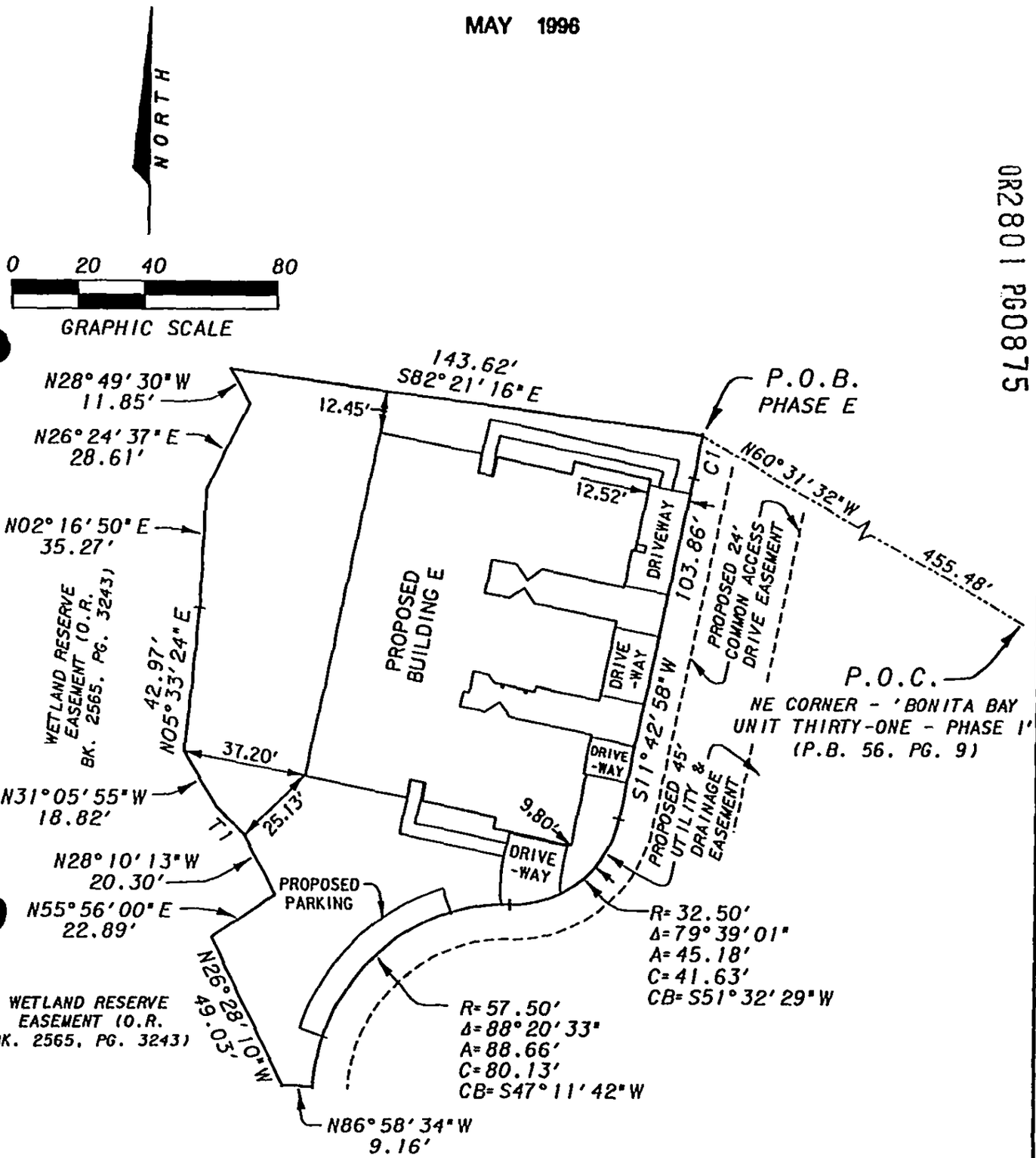

TANGENT TABLE		
NO.	BEARING	DISTANCE
T1	N45°54'36"W	12.23'

CURVE TABLE					
NO.	RADIUS	Δ	ARC	CHORD	CHORD BEARING
C1	277.50'	02°38'31"	12.80'	12.79'	S10°23'43"W

PBSJ
POST, BUCKLEY, SCHUH & JERNIGAN, INC.
ENGINEERS, PLANNERS & SURVEYORS
6326 PRESIDENTIAL COURT
FORT MYERS, FLORIDA 33919
(941)-482-7275

PHASE E
SURVEY PLOT PLAN

BAY POINTE AT BONITA

MAY 1998

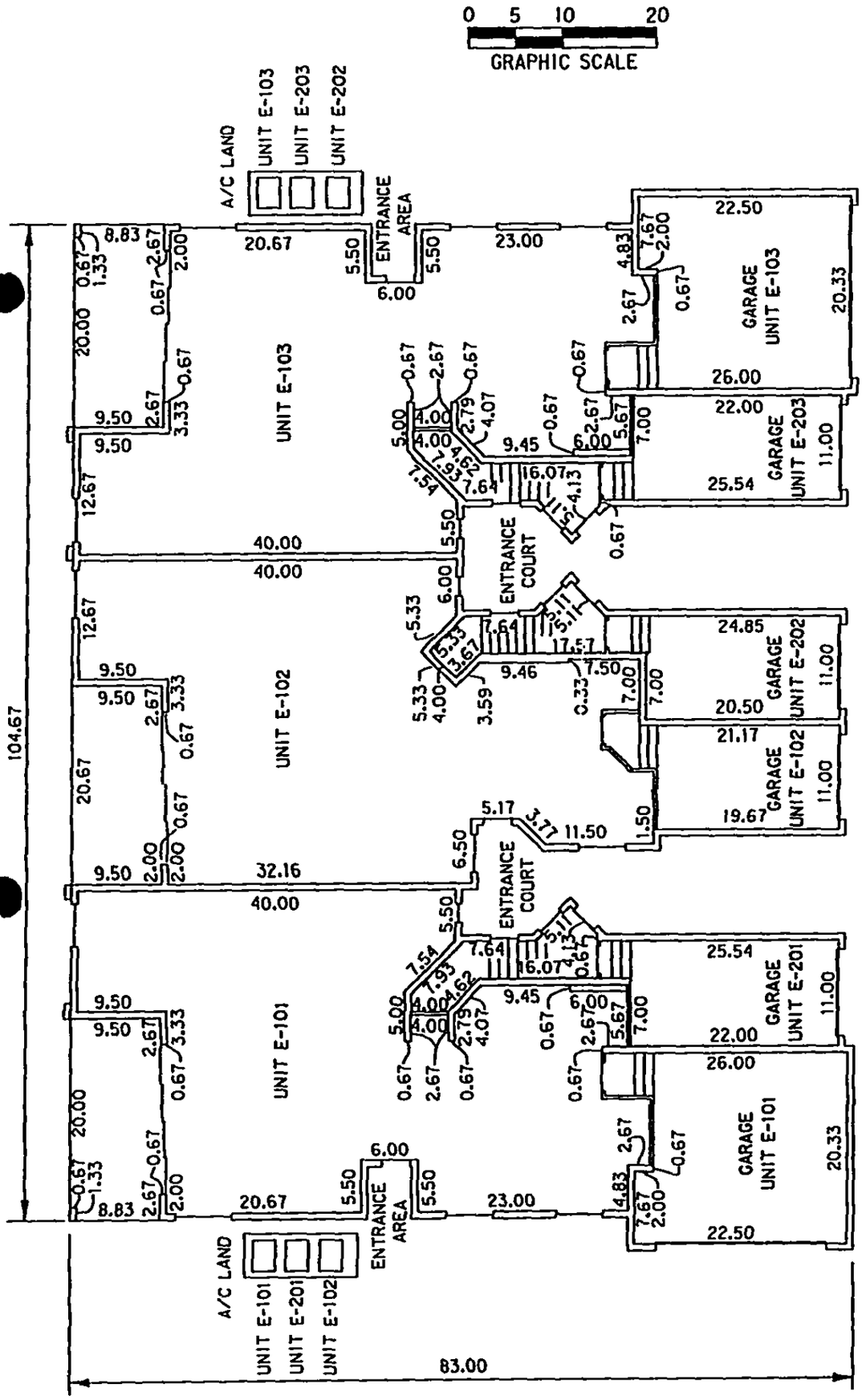

BUILDING E
FIRST FLOOR

	UNIT E-101	UNIT E-101 GARAGE	UNIT E-102	UNIT E-102 GARAGE	UNIT E-103	UNIT E-103 GARAGE	UNIT E-201 GARAGE	UNIT E-202 GARAGE	UNIT E-203 GARAGE
UPPER LIMITS:	20.25	20.25	20.25	20.25	20.25	20.25	20.25	20.25	20.25
LOWER LIMITS:	11.00	9.33	11.00	9.33	11.00	9.33	9.33	9.33	9.33

OR2801 PG0876

NOTES: DIMENSIONS SHOWN HEREON ARE IN FEET AND DECIMALS THEREOF.
DIMENSIONS AS SHOWN ARE SUBJECT TO NORMAL CONSTRUCTION TOLERANCES.
IMPROVEMENTS WITHIN THE CONDOMINIUM PROPERTY THAT ARE NOT UNITS OR LIMITED COMMON ELEMENTS ARE COMMON ELEMENTS

PBSJ
POST, BUCKLEY, SCHUH & JERNIGAN, INC.
ENGINEERS, PLANNERS & SURVEYORS
6326 PRESIDENTIAL COURT
FORT MYERS, FLORIDA 33919
(941)-482-7275

PHASE E
SHEET 3 OF 4

BAY POINTE AT BONITA BAY, A CONDOMINIUM

MAY 1998

0 5 10 20
GRAPHIC SCALE

OR2801 PG0873

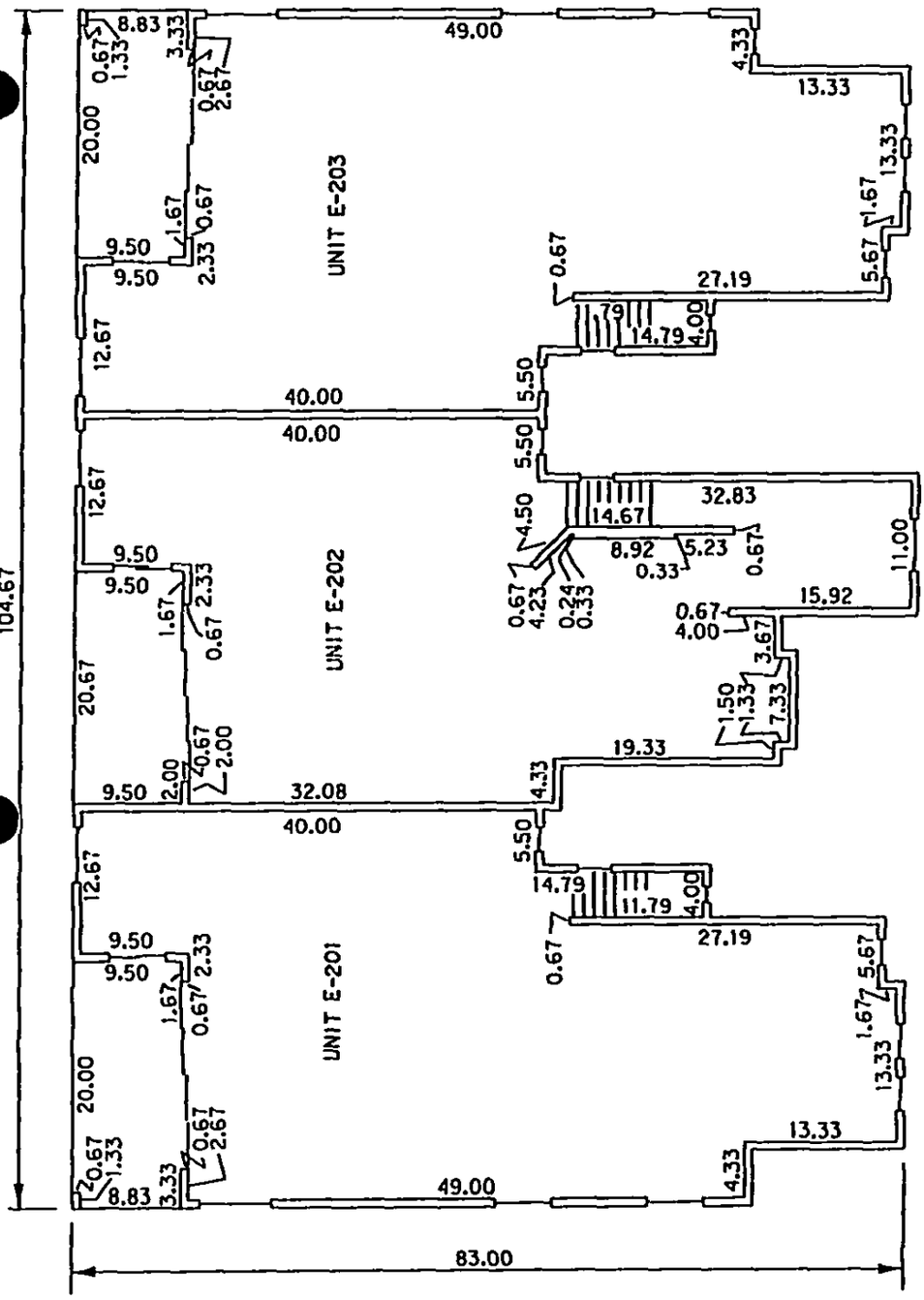

BUILDING E
SECOND FLOOR

	UNIT E-201	UNIT E-202	UNIT E-203
UPPER LIMITS:	31.31	31.31	31.31
LOWER LIMITS:	21.08	21.08	21.08

NOTES: DIMENSIONS SHOWN HEREON ARE IN FEET AND DECIMALS THEREOF.
DIMENSIONS AS SHOWN ARE SUBJECT TO NORMAL CONSTRUCTION TOLERANCES.
IMPROVEMENTS WITHIN THE CONDOMINIUM PROPERTY THAT ARE NOT UNITS OR LIMITED COMMON ELEMENTS ARE COMMON ELEMENTS

PBSJ
POST, BUCKLEY, SCHUH & JERNIGAN, INC.
ENGINEERS, PLANNERS & SURVEYORS
6326 PRESIDENTIAL COURT
FORT MYERS, FLORIDA 33919
(941)-482-7275

LEGAL DESCRIPTION
BAY POINTE AT BONITA BAY, A CONDOMINIUM
PHASE F

OR2801 PG0878

A portion of Sections 29 and 32 , Township 47 South, Range 25 East, Lee County, Florida being more particularly described as follows:

Commence at the Northeast corner of "Bonita Bay Unit Thirty-One, Phase I", as shown in the Public Records of Lee County, Florida, in Plat Book 56, Page 9; thence N60°31'32"W a distance of 455.48 feet to the **Point of Beginning**; thence N82°21'16"W a distance of 143.62 feet; thence N28°49'30"W a distance of 9.12 feet; thence N39°01'39"E a distance of 49.94 feet; thence N06°30'16"E a distance of21.22 feet; thence N00°39'16"W a distance of 20.38 feet; thence S89°52'39"E a distance of 121.09 feet; thence S03°34'29"W a distance of 80.80 feet to a point of curvature of a tangent circular curve concave to the west; thence southerly along the arc of said curve, having for its elements, a radius of 277.50 feet, a central angle of 05°29'58", a chord distance of 26.63 feet, a chord distance of 26.63 feet, a chord bearing of S06°19'28"W, an arc distance of 26.64 feet to the **Point of Beginning**.

Containing 12777.196 square feet, more or less.

BAY POINTE AT BONITA BAY, A CONDOMINIUM

MAY 1996

OR2801 PG0879

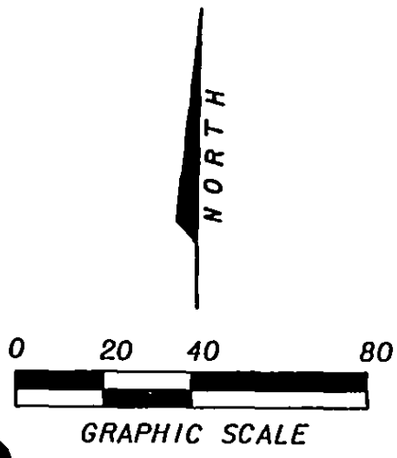

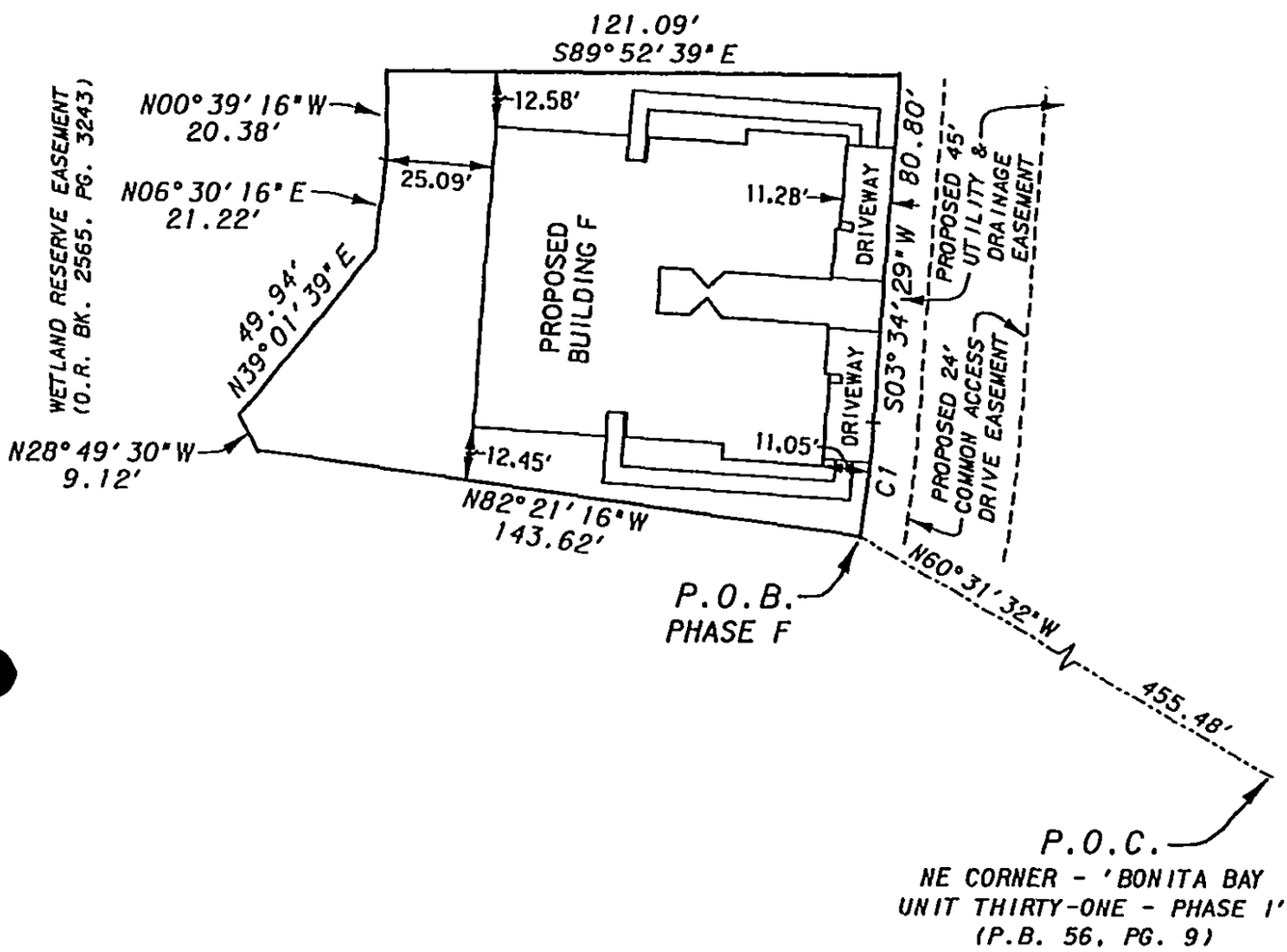

CURVE TABLE					
NO.	RADIUS	Δ	ARC	CHORD	CHORD BEARING
C1	277.50'	05°29'58"	26.64'	26.63'	S06°19'28"W

POST, BUCKLEY, SCHUH & JERNIGAN, INC.
ENGINEERS, PLANNERS & SURVEYORS
6326 PRESIDENTIAL COURT
FORT MYERS, FLORIDA 33919
(941)-482-7275

PHASE F
SURVEY PLOT PLAN

BAY POINTE AT BONITA BAY, A CONDOMINIUM

MAY 1996

0 5 10 20

GRAPHIC SCALE

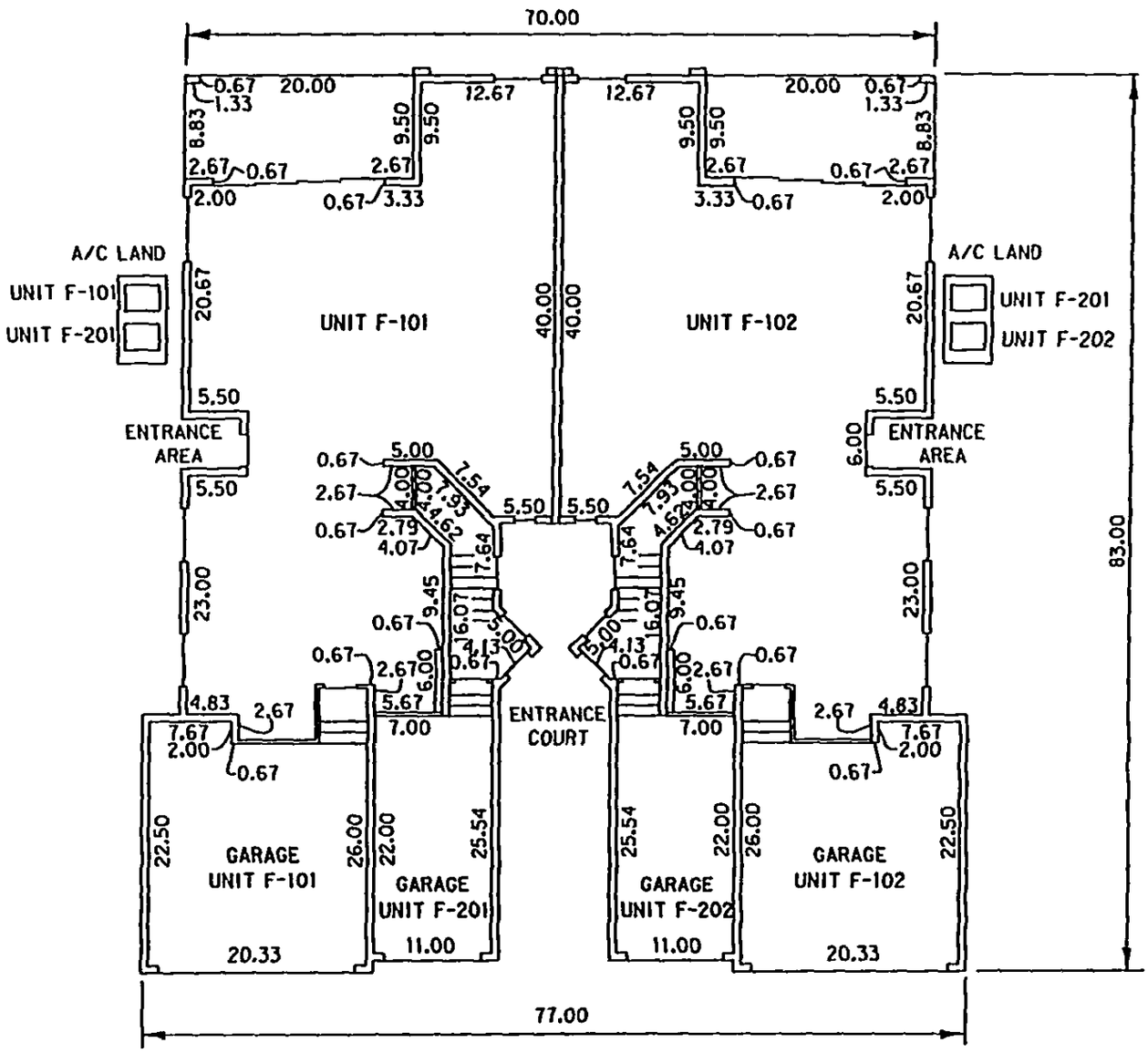

OR2801 PG0880

BUILDING F
FIRST FLOOR

	UNIT F-101	UNIT F-101 GARAGE	UNIT F-102	UNIT F-102 GARAGE	UNIT F-201 GARAGE	UNIT F-202 GARAGE
UPPER LIMITS:	20.25	20.25	20.25	20.25	20.25	20.25
LOWER LIMITS:	11.00	9.33	11.00	9.33	9.33	9.33

NOTES: DIMENSIONS SHOWN HEREON ARE IN FEET AND DECIMALS THEREOF.
DIMENSIONS AS SHOWN ARE SUBJECT TO NORMAL CONSTRUCTION TOLERANCES.
IMPROVEMENTS WITHIN THE CONDOMINIUM PROPERTY THAT ARE NOT UNITS OR LIMITED COMMON ELEMENTS ARE COMMON ELEMENTS

POST, BUCKLEY, SCHUH & JERNIGAN, INC.
ENGINEERS, PLANNERS & SURVEYORS
6326 PRESIDENTIAL COURT
FORT MYERS, FLORIDA 33919
(941)-482-7275

BAY POINTE AT BONITA BAY, A CONDOMINIUM

MAY 1996

0 5 10 20
GRAPHIC SCALE

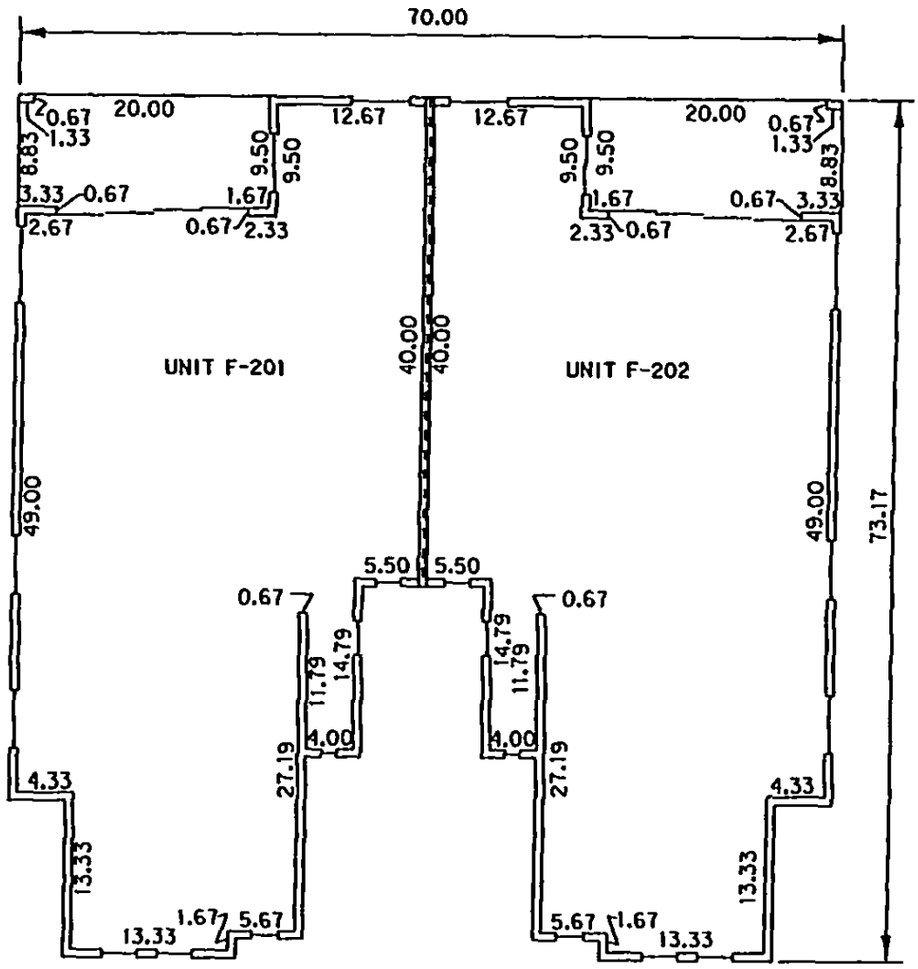

OR 2801 PG 0881

BUILDING F
SECOND FLOOR

	UNIT F-201	UNIT F-202
UPPER LIMITS:	31.31	31.31
LOWER LIMITS:	21.08	21.08

NOTES: DIMENSIONS SHOWN HEREON ARE IN FEET AND DECIMALS THEREOF.
DIMENSIONS AS SHOWN ARE SUBJECT TO NORMAL CONSTRUCTION TOLERANCES.
IMPROVEMENTS WITHIN THE CONDOMINIUM PROPERTY THAT ARE NOT UNITS OR LIMITED COMMON ELEMENTS ARE COMMON ELEMENTS

PBSJ
POST, BUCKLEY, SCHUH & JERNIGAN, INC.
ENGINEERS, PLANNERS & SURVEYORS
6326 PRESIDENTIAL COURT
FORT MYERS, FLORIDA 33919
(941)-482-7275

LEGAL DESCRIPTION
BAY POINTE AT BONITA BAY, A CONDOMINIUM
PHASE G

A portion of Sections 29 and 32 , Township 47 South, Range 25 East, Lee County, Florida being more particularly described as follows:

Commence at the Northeast corner of "Bonita Bay Unit Thirty-One, Phase I", as shown in the Public Records of Lee County, Florida, in Plat Book 56, Page 9; thence N49°33'18"W a distance of 510.57 feet to the **Point of Beginning**; thence N89°52'39"W a distance of 121.09 feet; thence N00°39'16"W a distance of 8.61 feet; thence N17°42'26"W a distance of 25.34 feet; thence N39°09'08"W a distance of 36.84 feet; thence N17°22'42"W a distance of 23.34 feet; thence N73°24'17"E a distance of 151.59 feet; thence S24°35'33"E a distance of 26.65 feet to a point of curvature of a tangent circular curve concave to the west; thence southerly along the arc of said curve, having for its elements, a radius of 77.50 feet, a central angle of 28°10'02", a chord distance of 37.72 feet, a chord bearing of S10°30'32"E, an arc distance of 38.10 feet; thence S03°34'29"W a distance of 65.95 feet to the **Point of Beginning.**

Containing 15320.683 square feet, more or less.

OR 2801 PG 0882

BAY POINTE AT BONITA BAY, A CONDOMINIUM

MAY 1996

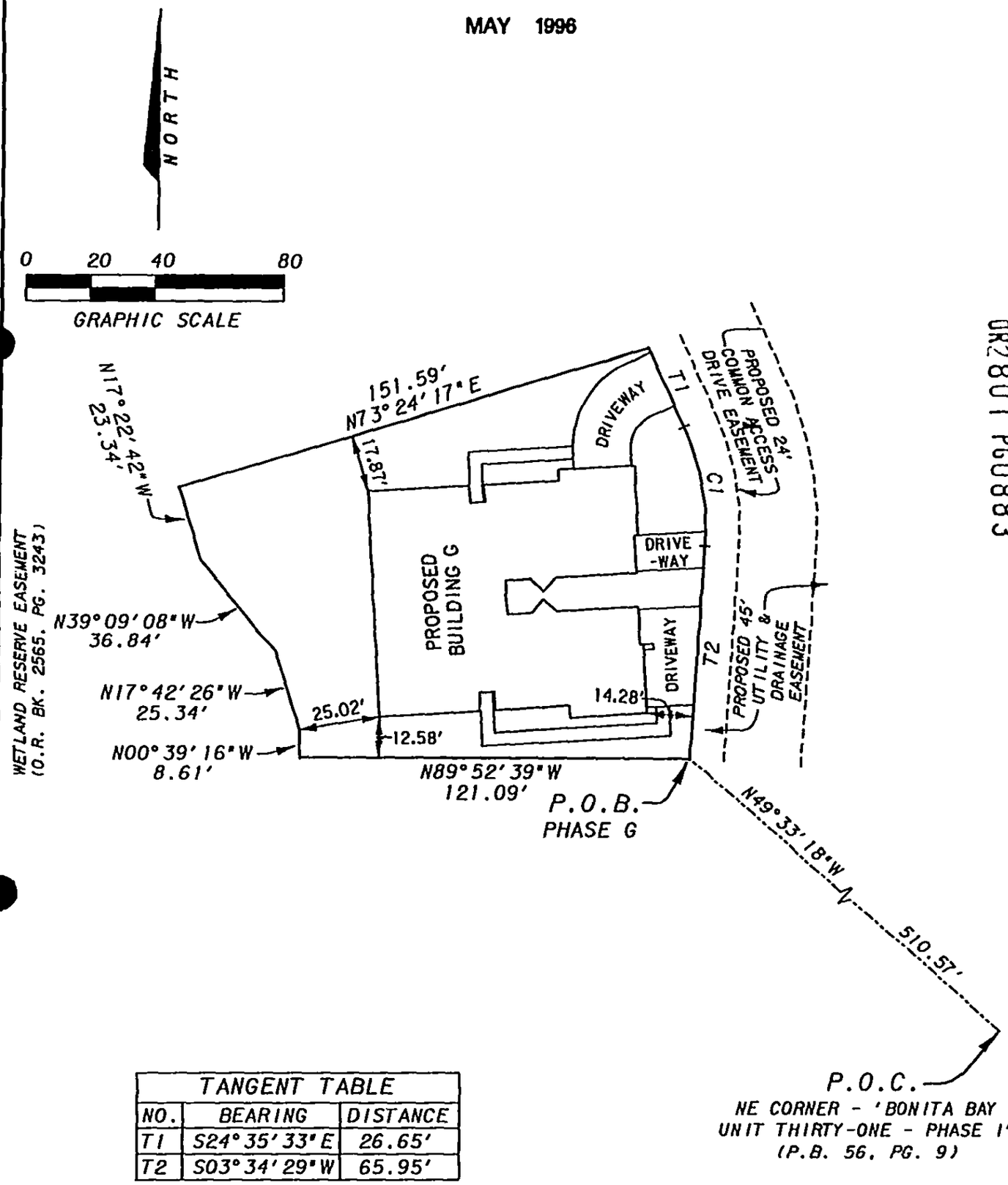

OR2801 PG0883

TANGENT TABLE		
NO.	BEARING	DISTANCE
T1	S24°35'33"E	26.65'
T2	S03°34'29"W	65.95'

CURVE TABLE					
NO.	RADIUS	Δ	ARC	CHORD	CHORD BEARING
C1	77.50'	28°10'02"	38.10'	37.72'	S10°30'32"E

POST, BUCKLEY, SCHUH & JERNIGAN, INC.
ENGINEERS, PLANNERS & SURVEYORS
6326 PRESIDENTIAL COURT
FORT MYERS, FLORIDA 33919
(941)-482-7275

PHASE G
SURVEY PLOT PLAN

BAY POINTE AT BONITA BAY, A CONDOMINIUM

MAY 1996

0 5 10 20

GRAPHIC SCALE

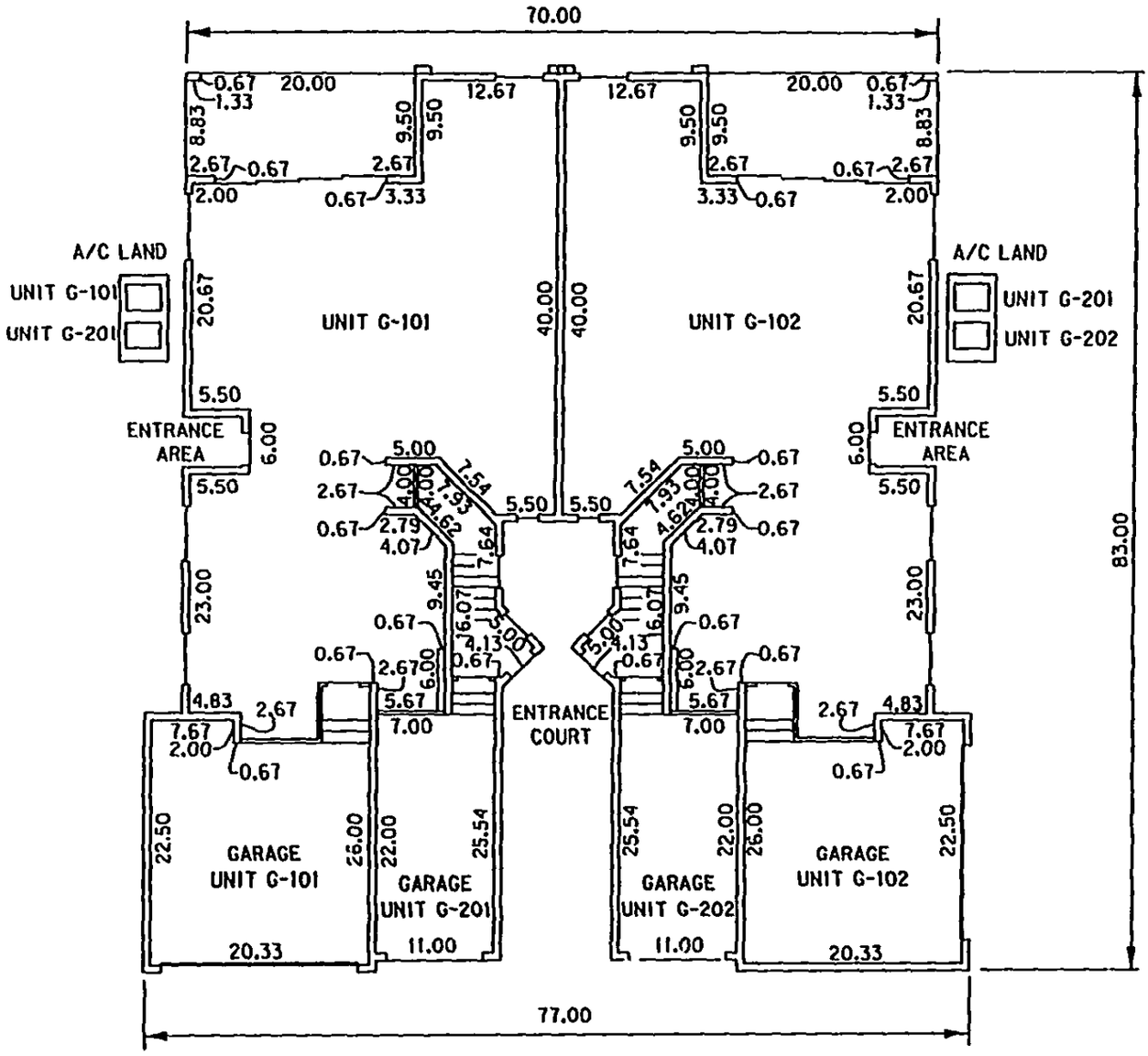

OR2801 PG0884

BUILDING G
FIRST FLOOR

	UNIT G-101	UNIT G-101 GARAGE	UNIT G-102	UNIT G-102 GARAGE	UNIT G-201 GARAGE	UNIT G-202 GARAGE
UPPER LIMITS:	20.25	20.25	20.25	20.25	20.25	20.25
LOWER LIMITS:	11.00	9.33	11.00	9.33	9.33	9.33

NOTES: DIMENSIONS SHOWN HEREON ARE IN FEET AND DECIMALS THEREOF.
DIMENSIONS AS SHOWN ARE SUBJECT TO NORMAL CONSTRUCTION TOLERANCES.
IMPROVEMENTS WITHIN THE CONDOMINIUM PROPERTY THAT ARE NOT UNITS OR LIMITED COMMON ELEMENTS ARE COMMON ELEMENTS

PBS&J
POST, BUCKLEY, SCHUH & JERNIGAN, INC.
ENGINEERS, PLANNERS & SURVEYORS
6326 PRESIDENTIAL COURT
FORT MYERS, FLORIDA 33919
(941)-482-7275

BAY POINTE AT BONITA BAY, A CONDOMINIUM

MAY 1996

0 5 10 20

GRAPHIC SCALE

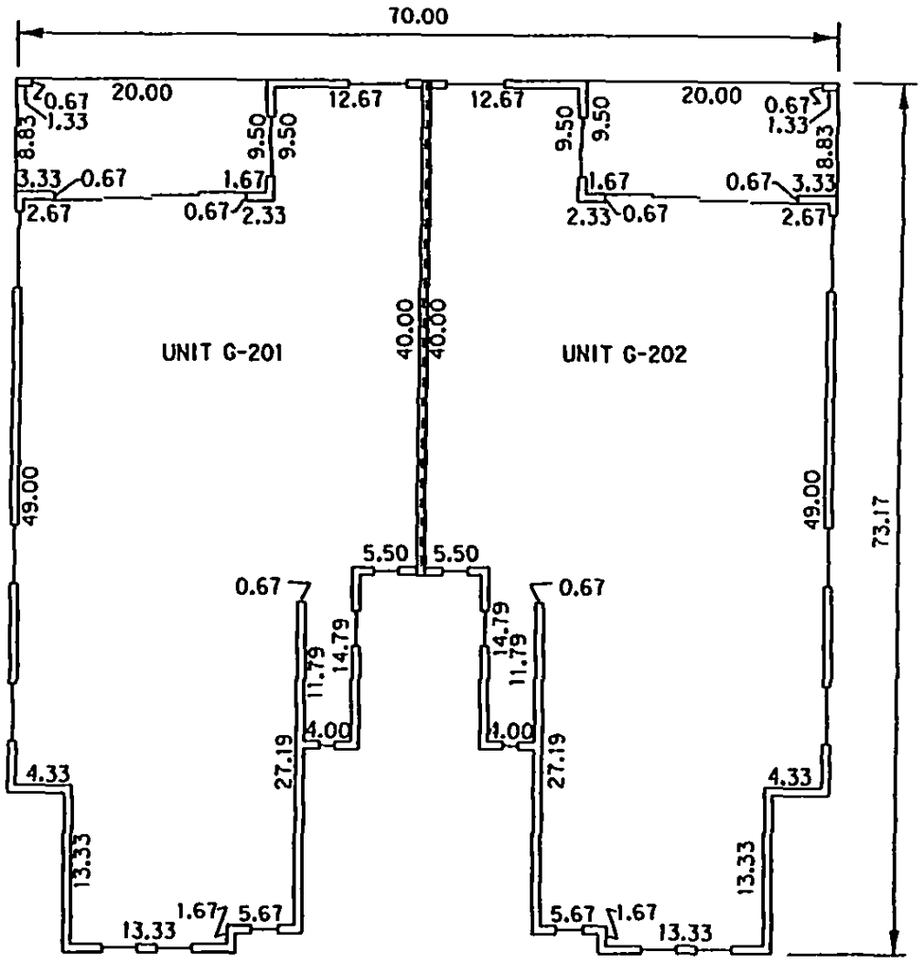

OR2801 PG0885

BUILDING G
SECOND FLOOR

	UNIT G-201	UNIT G-202
UPPER LIMITS:	31.31	31.31
LOWER LIMITS:	21.08	21.08

NOTES: DIMENSIONS SHOWN HEREON ARE IN FEET AND DECIMALS THEREOF.
DIMENSIONS AS SHOWN ARE SUBJECT TO NORMAL CONSTRUCTION TOLERANCES.
IMPROVEMENTS WITHIN THE CONDOMINIUM PROPERTY THAT ARE NOT UNITS OR LIMITED COMMON ELEMENTS ARE COMMON ELEMENTS

PBSJ
POST, BUCKLEY, SCHUH & JERNIGAN, INC.
ENGINEERS, PLANNERS & SURVEYORS
6326 PRESIDENTIAL COURT
FORT MYERS, FLORIDA 33919
(941)-482-7275

LEGAL DESCRIPTION
BAY POINTE AT BONITA BAY, A CONDOMINIUM
PHASE II

A portion of Sections 29 and 32 , Township 47 South, Range 25 East, Lee County, Florida being more particularly described as follows:

Commence at the Northeast corner of "Bonita Bay Unit Thirty-One, Phase I", as shown in the Public Records of Lee County, Florida, in Plat Book 56, Page 9; thence N41°16'54"W a distance of 609.94 feet to the **Point of Beginning**; thence S73°24'17"W a distance of 151.59 feet; thence N17°22'42"W a distance of 18.73 feet; thence N21°54'29"W a distance of 30.53 feet; thence N15°24'20"W a distance of 32.50 feet; thence N06°43'41"E a distance of 19.33 feet; thence N22°28'55"W a distance of 29.72 feet; thence N07°00'43"W a distance of 21.39 feet; thence N81°37'50"E a distance of 137.88 to a point on the arc of a non-tangent circular curve concave to the east; thence southerly along the arc of said curve, having for its elements, a radius of 222.50 feet, a central angle of 16°12'41", a chord distance of 62.74 feet, a chord bearing of S16°29'13"E, an arc distance of 62.95 feet; thence S24°35'33"E a distance of 68.21 feet to the **Point of Beginning.**

Containing 20128.456 square feet, more or less.

OR2801 PG0886

BAY POINTE AT BONITA BAY, A CONDOMINIUM

MAY 1996

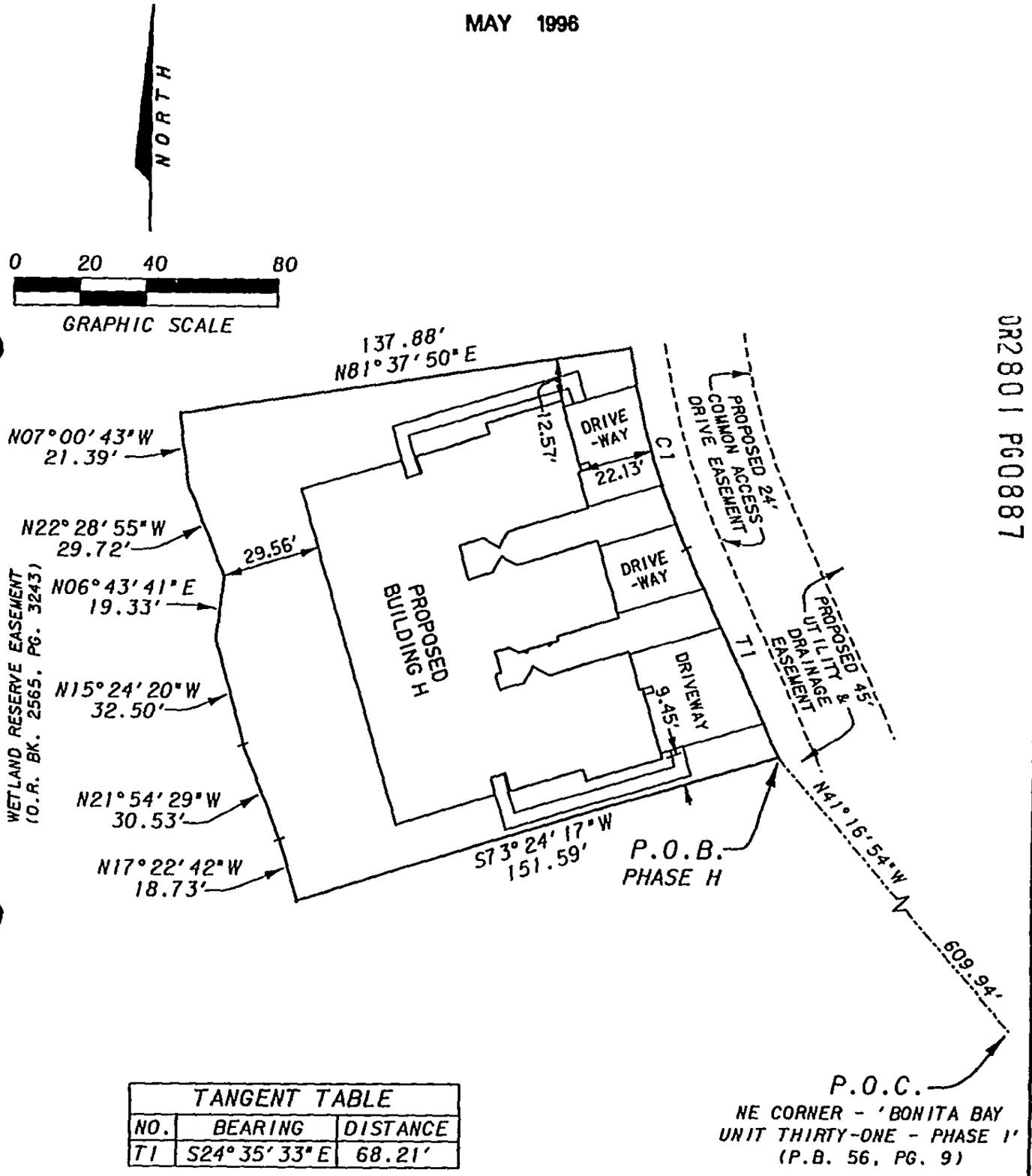

OR2801 PG0887

TANGENT TABLE		
NO.	BEARING	DISTANCE
T1	S24°35'33"E	68.21'

CURVE TABLE					
NO.	RADIUS	Δ	ARC	CHORD	CHORD BEARING
C1	222.50'	16°12'41"	62.95'	62 .74'	S16°29'13"E

POST, BUCKLEY, SCHUH & JERNIGAN, INC.
ENGINEERS, PLANNERS & SURVEYORS
6326 PRESIDENTIAL COURT
FORT MYERS, FLORIDA 33919
(941)-482-7275

PHASE H
SURVEY PLOT PLAN

BAY POINTE AT BONITA BAY, A CONDOMINIUM

MAY 1996

0R2801 PG0888

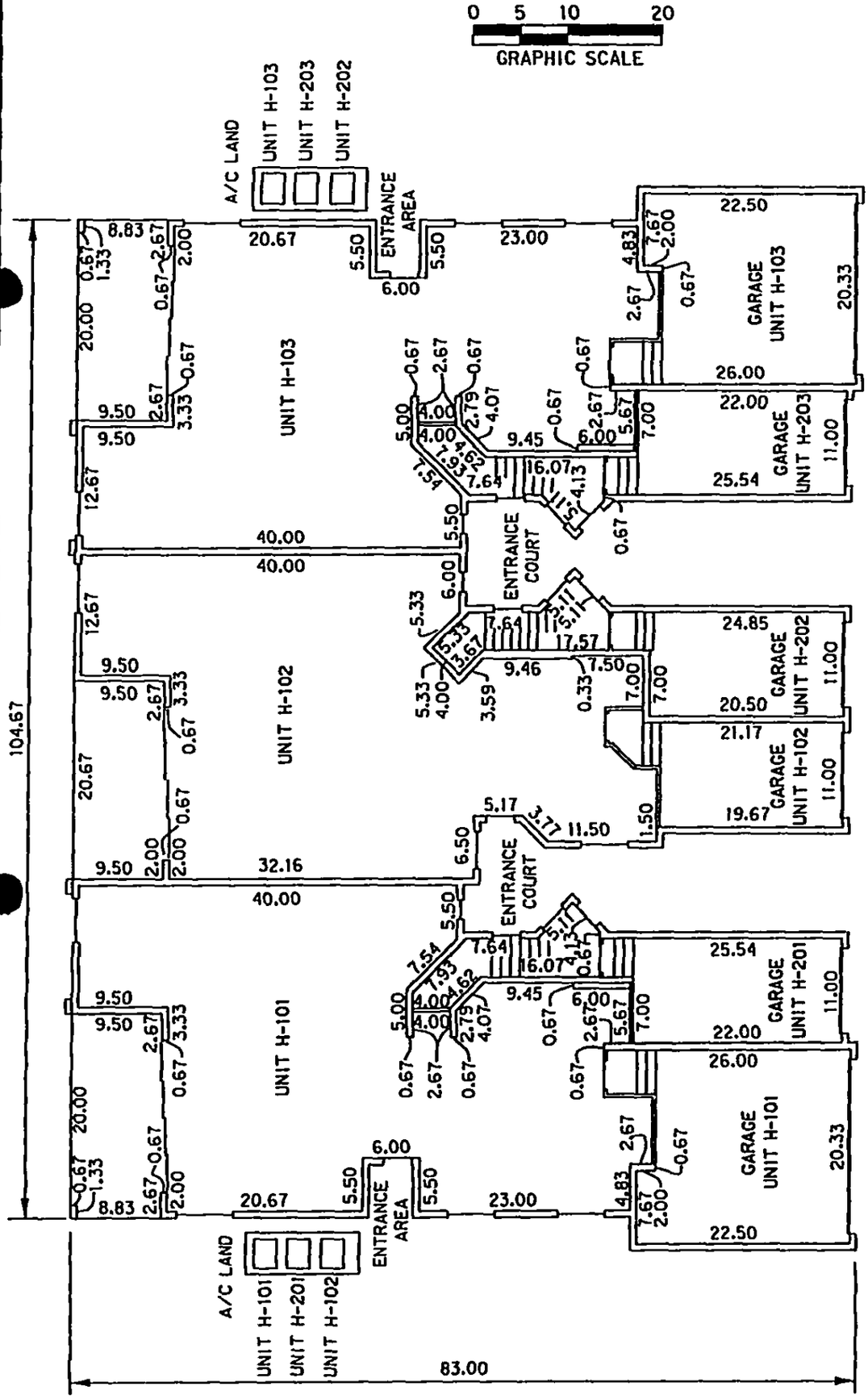

	UNIT H-103 GARAGE	UNIT H-203 GARAGE	UNIT H-202 GARAGE	UNIT H-201 GARAGE	UNIT H-103 GARAGE	UNIT H-103	UNIT H-102 GARAGE	UNIT H-102	UNIT H-101 GARAGE	UNIT H-101
UPPER LIMITS:	20.25	20.25	20.25	20.25	20.25	20.25	20.25	20.25	20.25	20.25
LOWER LIMITS:	9.33	9.33	9.33	9.33	9.33	11.00	9.33	11.00	9.33	11.00

NOTES: DIMENSIONS SHOWN HEREON ARE IN FEET AND DECIMALS THEREOF.
DIMENSIONS AS SHOWN ARE SUBJECT TO NORMAL CONSTRUCTION TOLERANCES.
IMPROVEMENTS WITHIN THE CONDOMINIUM PROPERTY THAT ARE NOT UNITS OR LIMITED COMMON ELEMENTS ARE COMMON ELEMENTS

PBS&J
POST, BUCKLEY, SCHUH & JERNIGAN, INC.
ENGINEERS, PLANNERS & SURVEYORS
6326 PRESIDENTIAL COURT
FORT MYERS, FLORIDA 33919
(941)-482-7275

BAY POINTE AT BONITA BAY, A CONDOMINIUM

MAY 1998

0 5 10 20
GRAPHIC SCALE

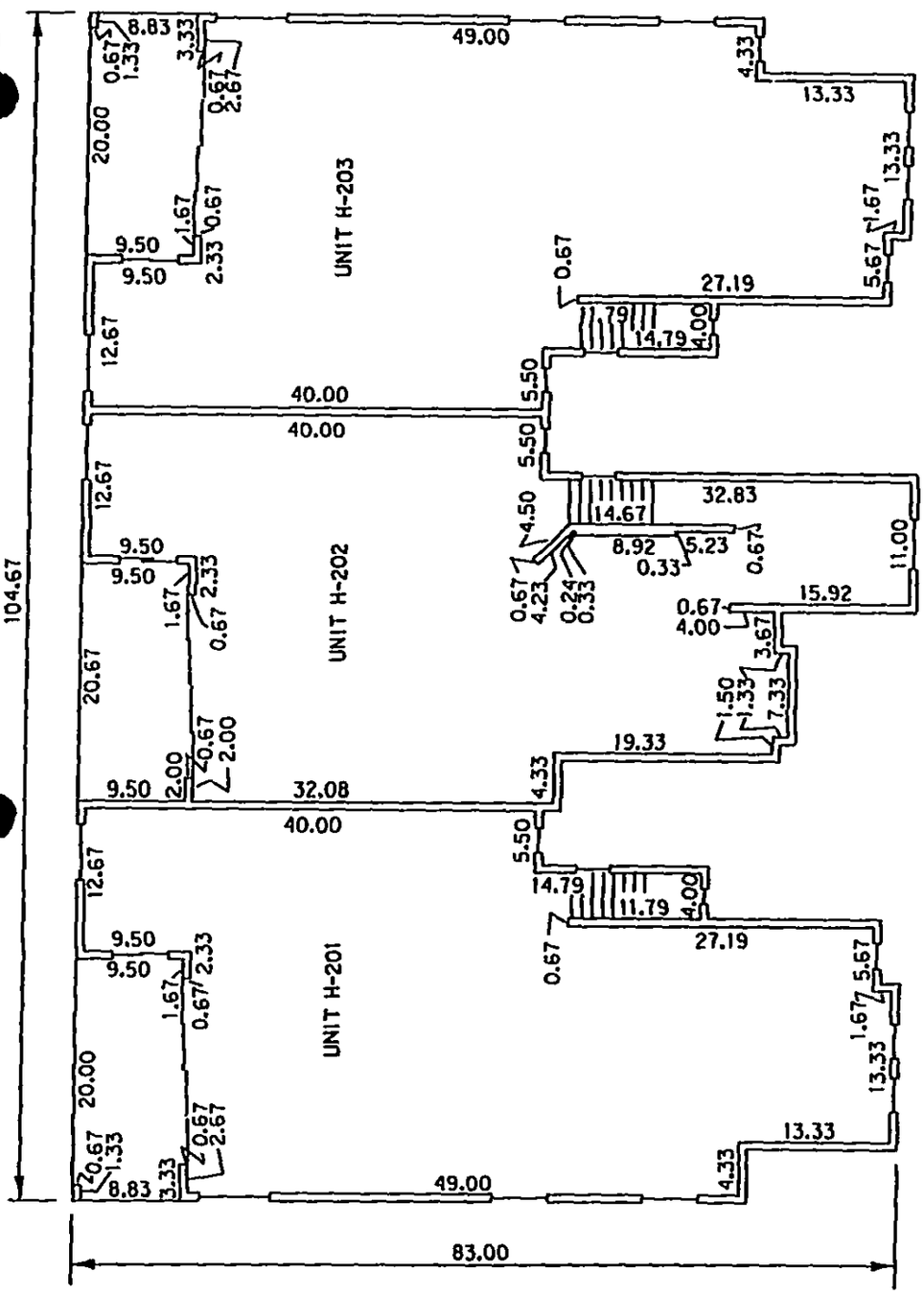

BUILDING H
SECOND FLOOR

	UNIT H-201	UNIT H-202	UNIT H-203
UPPER LIMITS:	31.31	31.31	31.31
LOWER LIMITS:	21.08	21.08	21.08

OR2801 PG0889

NOTES: DIMENSIONS SHOWN HEREON ARE IN FEET AND DECIMALS THEREOF.
DIMENSIONS AS SHOWN ARE SUBJECT TO NORMAL CONSTRUCTION TOLERANCES.
IMPROVEMENTS WITHIN THE CONDOMINIUM PROPERTY THAT ARE NOT UNITS OR LIMITED COMMON ELEMENTS ARE COMMON ELEMENTS

PBS&J
POST, BUCKLEY, SCHUH & JERNIGAN, INC.
ENGINEERS, PLANNERS & SURVEYORS
6326 PRESIDENTIAL COURT
FORT MYERS, FLORIDA 33919
(941)-482-7275

LEGAL DESCRIPTION
BAY POINTE AT BONITA BAY, A CONDOMINIUM
PHASE I

A portion of Sections 29 and 32 , Township 47 South, Range 25 East, Lee County, Florida being more particularly described as follows:

Commence at the Northeast corner of "Bonita Bay Unit Thirty-One, Phase I", as shown in the Public Records of Lee County, Florida, in Plat Book 56, Page 9; thence N37°41'40"W a distance of 733.68 feet to the **Point of Beginning**; thence S81°37'50"W a distance of 137.88 feet; thence N07°00'43"W a distance of 15.63 feet; thence N40°41'40"W a distance of 28.83 feet; thence N16°24'37"E a distance of 24.91 feet; thence N13°38"35"E a distance of 32.97 feet; thence N23°52'13"E a distance of 28.06 feet; thence N13°11'16"W a distance of 35.64 feet; thence N89°51'22"E a distance of 138.15 feet to a point lying on the arc of a non-tangent circular curve concave to the east; thence southerly along the arc of said curve, having for its elements, a radius of 147.50 feet, a central angle of 08°42'22", a chord distance of 22.39 feet, a chord bearing of S04°12'33"W, an arc distance of 22.41 feet; thence S00°08'38"E a distance of 79.75 feet to a point of curvature of a tangent circular curve concave to the east; thence southerly along the arc of said curve, having for its elements, a radius of 222.50 feet, a central angle of 08°14'15", a chord distance of 31.96 feet, a chord bearing of S04°15'45"E, an arc distance of 31.99 feet to the **Point of Beginning.**

Containing 20268.084 square feet, more or less.

OR2801 PG0890

BAY POINTE AT BONITA BAY, A CONDOMINIUM

MAY 1996

OR2801 PG0891

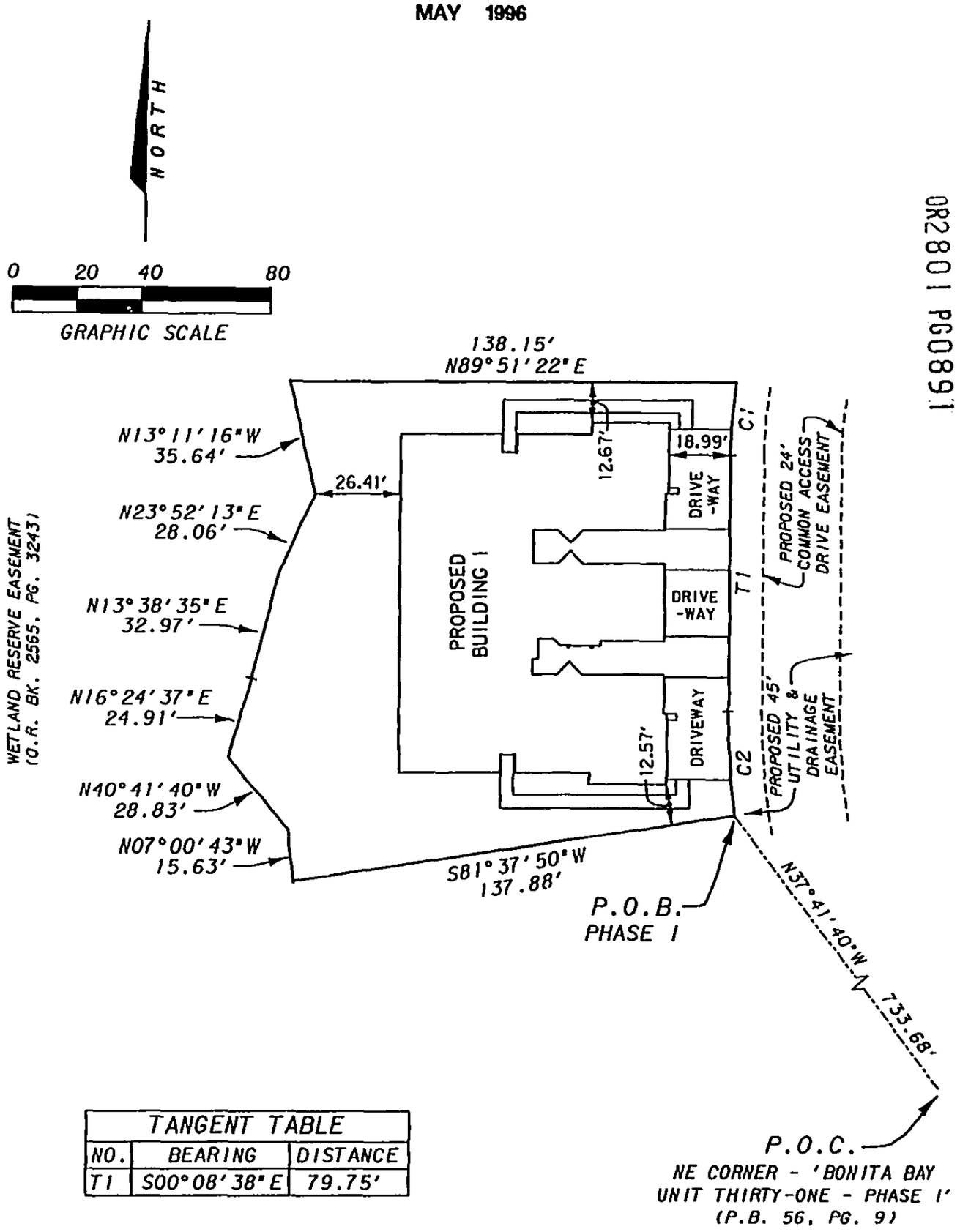

TANGENT TABLE		
NO.	BEARING	DISTANCE
T1	S00°08'38"E	79.75'

CURVE TABLE					
NO.	RADIUS	Δ	ARC	CHORD	CHORD BEARING
C1	147.50'	08°42'22"	22.41'	22.39'	S04°12'33"W
C2	222.50'	08°14'15"	31.99'	31.96'	S04°15'45"E

PBSJ
POST, BUCKLEY, SCHUH & JERNIGAN, INC.
ENGINEERS, PLANNERS & SURVEYORS
6326 PRESIDENTIAL COURT
FORT MYERS, FLORIDA 33919
(941)-482-7275

PHASE I
SURVEY PLOT PLAN

BAY POINTE AT BONITA BAY, A CONDOMINIUM

MAY 1998

OR 2801 PG 0892

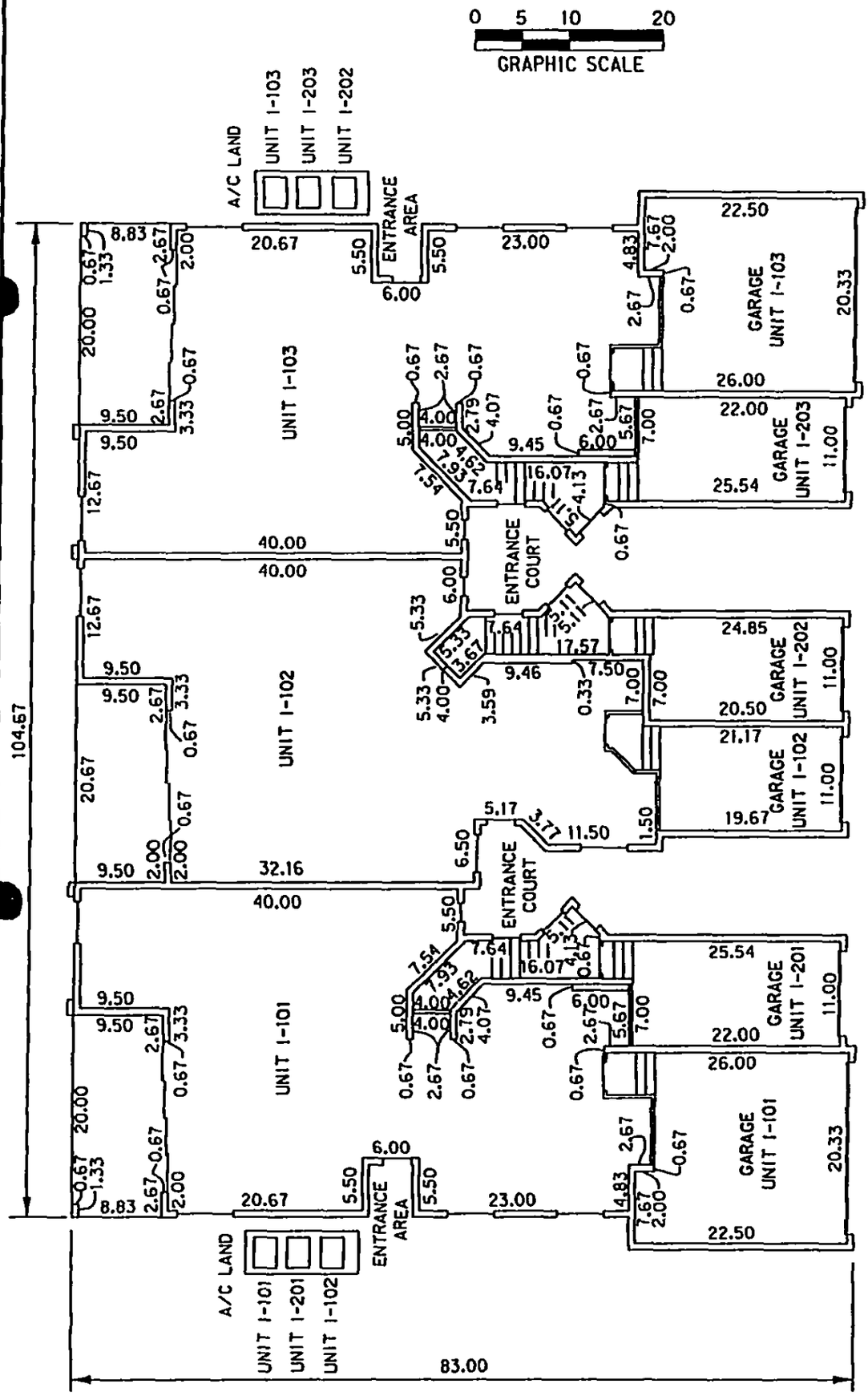

BUILDING I
FIRST FLOOR

	UNIT I-101	UNIT I-101 GARAGE	UNIT I-102	UNIT I-102 GARAGE	UNIT I-103	UNIT I-103 GARAGE	UNIT I-201 GARAGE	UNIT I-202 GARAGE	UNIT I-203 GARAGE
UPPER LIMITS:	20.25	20.25	20.25	20.25	20.25	20.25	20.25	20.25	20.25
LOWER LIMITS:	11.00	9.33	11.00	9.33	11.00	9.33	9.33	9.33	9.33

NOTES: DIMENSIONS SHOWN HEREON ARE IN FEET AND DECIMALS THEREOF.
DIMENSIONS AS SHOWN ARE SUBJECT TO NORMAL CONSTRUCTION TOLERANCES.
IMPROVEMENTS WITHIN THE CONDOMINIUM PROPERTY THAT ARE NOT UNITS OR LIMITED COMMON ELEMENTS ARE COMMON ELEMENTS

PBSJ
POST, BUCKLEY, SCHUH & JERNIGAN, INC.
ENGINEERS, PLANNERS & SURVEYORS
6326 PRESIDENTIAL COURT
FORT MYERS, FLORIDA 33919
(941)-482-7275

BAY POINTE AT BONITA BAY, A CONDOMINIUM

MAY 1996

0 5 10 20
GRAPHIC SCALE

OR2801 PG0893

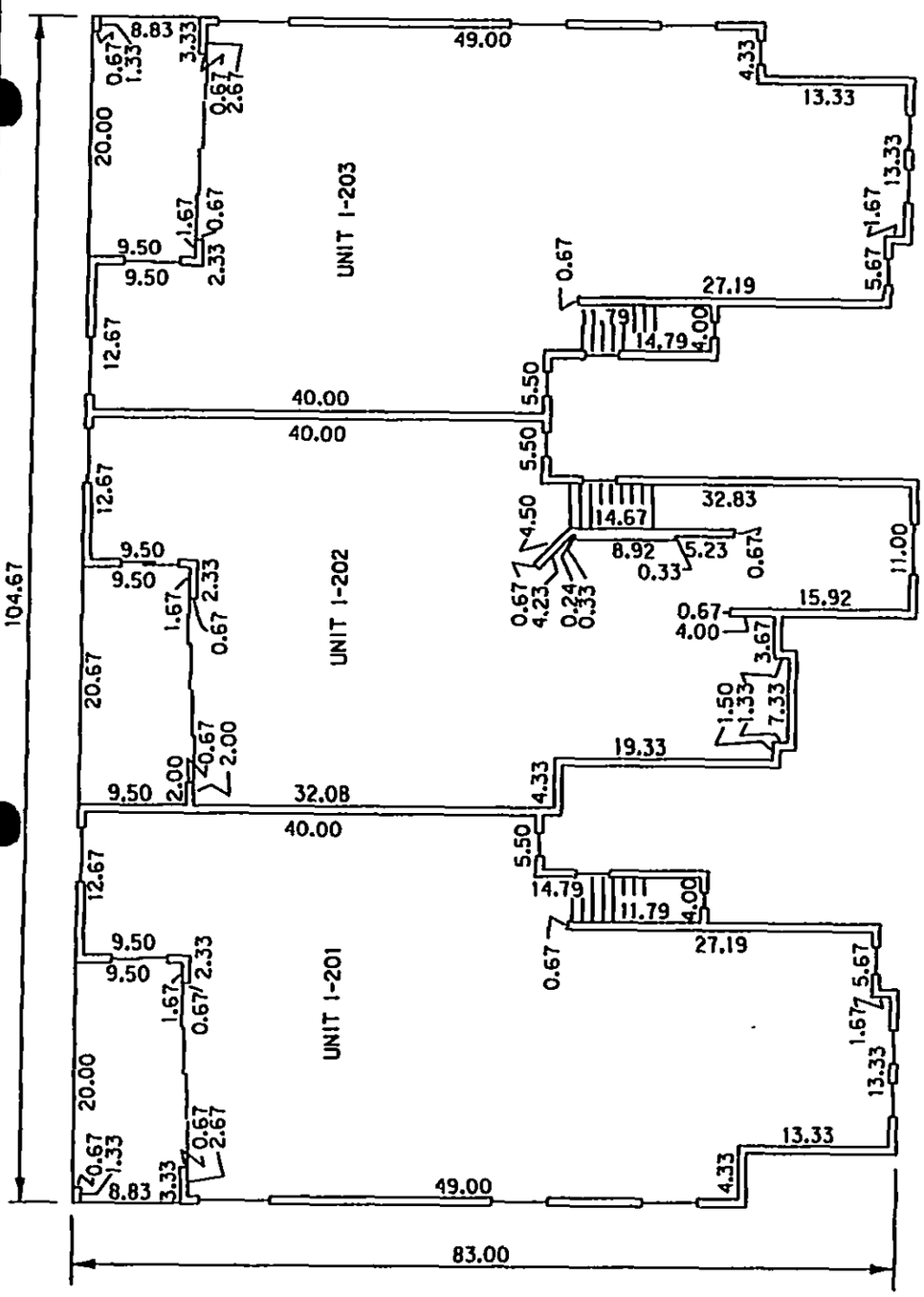

BUILDING 1
SECOND FLOOR

	UNIT 1-201	UNIT 1-202	UNIT 1-203
UPPER LIMITS:	31.31	31.31	31.31
LOWER LIMITS:	21.08	21.08	21.08

NOTES: DIMENSIONS SHOWN HEREON ARE IN FEET AND DECIMALS THEREOF.
DIMENSIONS AS SHOWN ARE SUBJECT TO NORMAL CONSTRUCTION TOLERANCES.
IMPROVEMENTS WITHIN THE CONDOMINIUM PROPERTY THAT ARE NOT UNITS OR LIMITED COMMON ELEMENTS ARE COMMON ELEMENTS

PBSJ
POST, BUCKLEY, SCHUH & JERNIGAN, INC.
ENGINEERS, PLANNERS & SURVEYORS
6326 PRESIDENTIAL COURT
FORT MYERS, FLORIDA 33919
(941)-482-7275

LEGAL DESCRIPTION
BAY POINTE AT BONITA BAY, A CONDOMINIUM
PHASE J

A portion of Sections 29 and 32 , Township 47 South, Range 25 East, Lee County, Florida being more particularly described as follows:

Commence at the Northeast corner of "Bonita Bay Unit Thirty-One, Phase I", as shown in the Public Records of Lee County, Florida, in Plat Book 56, Page 9; thence N32°10'37"W a distance of 844.15 feet to the **Point of Beginning**; thence S89°51'22"W a distance of 138.15 feet; thence N13°11'16"W a distance of 5.63 feet: thence N09°05'40"W a distance of 31.35 feet; thence N46°22'49"E a distance of 30.56 feet; thence N10°28'33"W a distance of 40.25 feet; thence N13°02'21"E a distance of 5.40 feet; thence N89°51'23"E a distance of 176.67 feet to a point lying on the arc of a non-tangent circular curve concave to the west; thence southerly along the arc of said curve, having for its elements, a radius of 17.50 feet, a central angle of 63°56'02", a chord distance of 18.53 feet, a chord bearing of S14°13'47"W, an arc distance of 19.53 feet to a point of reverse curvature of a tangent circular curve concave to the southeast; thence southwesterly along the arc of said curve, having for its elements, a radius of 147.50 feet, a central angle of 37°38'04", a chord distance of 95.15 feet, a chord bearing of S27°22'46"W, an arc distance of 96.88 feet to the **Point of Beginning.**

Containing 15826.293 square feet, more or less.

OR2801 PG0894

BAY POINTE AT BONITA BAY, A CONDOMINIUM

MAY 1996

OR2801 PG0895

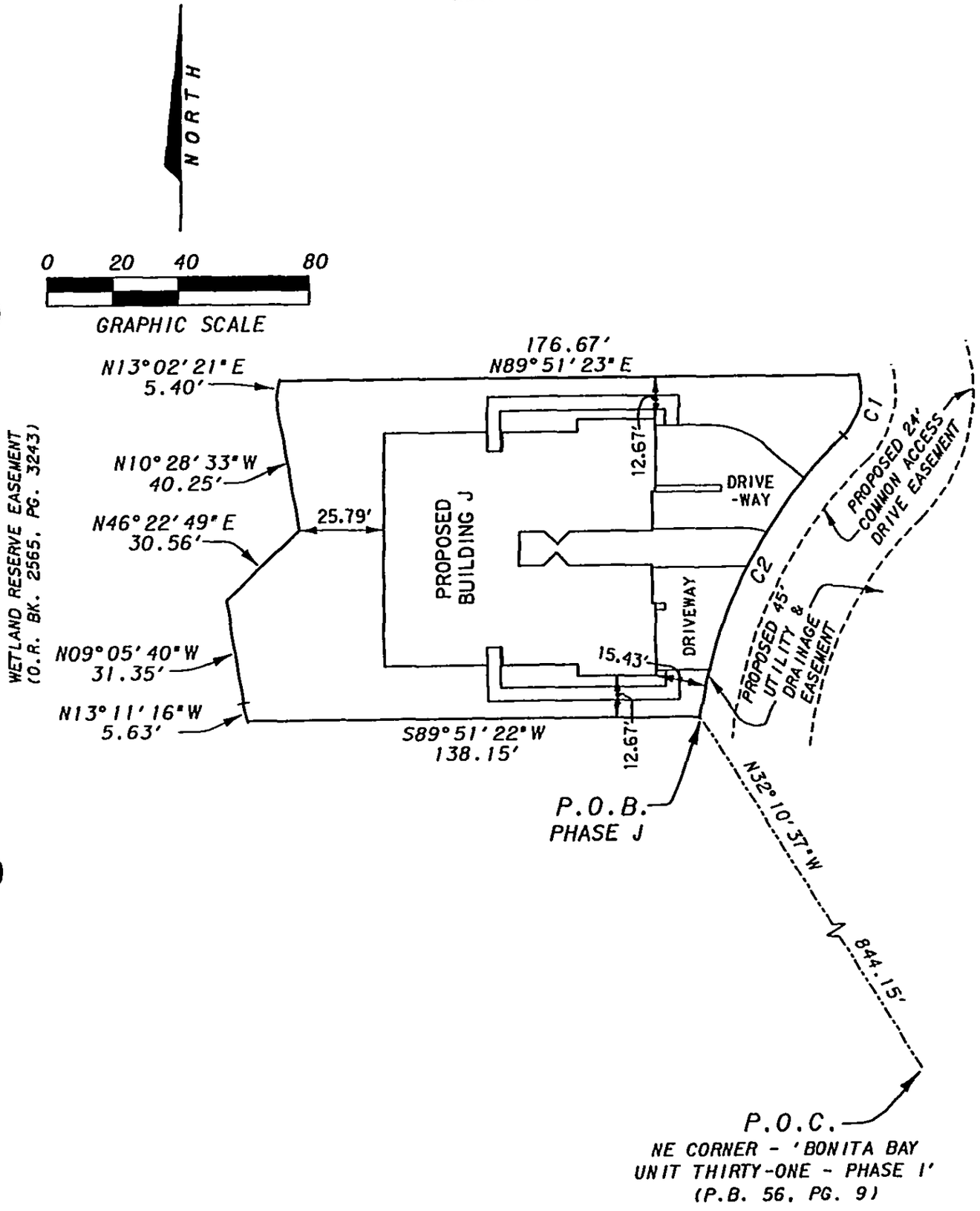

CURVE TABLE					
NO.	RADIUS	Δ	ARC	CHORD	CHORD BEARING
C1	17.50'	63°56'02"	19.53'	18.53'	S14°13'47"W
C2	147.50'	37°38'04"	96.88'	95.15'	S27°22'46"W

POST, BUCKLEY, SCHUH & JERNIGAN, INC.
ENGINEERS, PLANNERS & SURVEYORS
6326 PRESIDENTIAL COURT
FORT MYERS, FLORIDA 33919
(941)-482-7275

PHASE J
SURVEY PLOT PLAN

BAY POINTE AT BONITA BAY, A CONDOMINIUM

MAY 1996

0 5 10 20
GRAPHIC SCALE

OR2801 PG0896

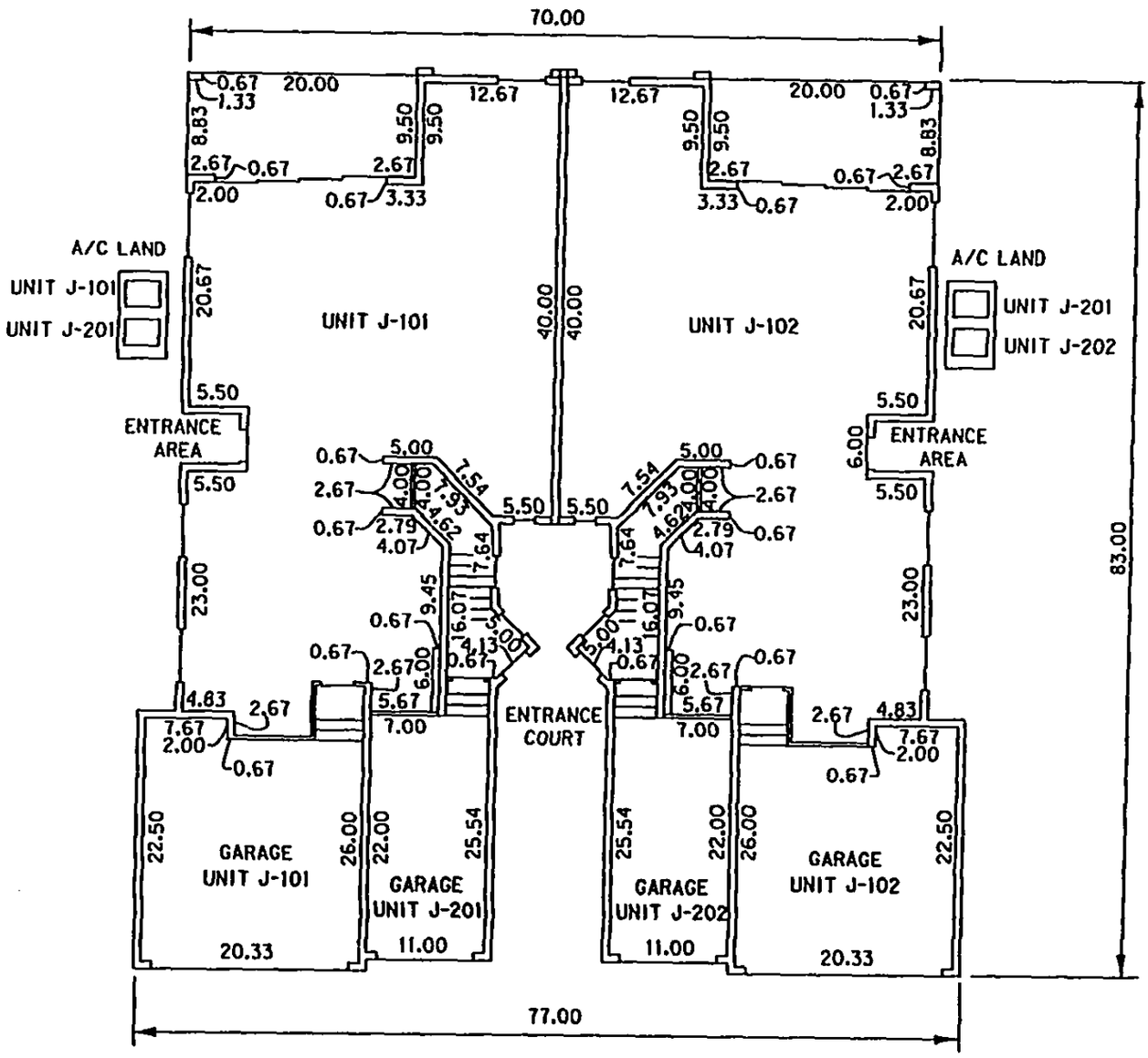

BUILDING J
FIRST FLOOR

	UNIT J-101	UNIT J-101 GARAGE	UNIT J-102	UNIT J-102 GARAGE	UNIT J-201 GARAGE	UNIT J-202 GARAGE
UPPER LIMITS:	20.25	20.25	20.25	20.25	20.25	20.25
LOWER LIMITS:	11.00	9.33	11.00	9.33	9.33	9.33

NOTES: DIMENSIONS SHOWN HEREON ARE IN FEET AND DECIMALS THEREOF.
DIMENSIONS AS SHOWN ARE SUBJECT TO NORMAL CONSTRUCTION TOLERANCES.
IMPROVEMENTS WITHIN THE CONDOMINIUM PROPERTY THAT ARE NOT UNITS OR LIMITED COMMON ELEMENTS ARE COMMON ELEMENTS

PBSJ
POST, BUCKLEY, SCHUH & JERNIGAN, INC.
ENGINEERS, PLANNERS & SURVEYORS
6326 PRESIDENTIAL COURT
FORT MYERS, FLORIDA 33919
(941)-482-7275

BAY POINTE AT BONITA BAY, A CONDOMINIUM

MAY 1998

0 5 10 20
GRAPHIC SCALE

OR2801 PG0897

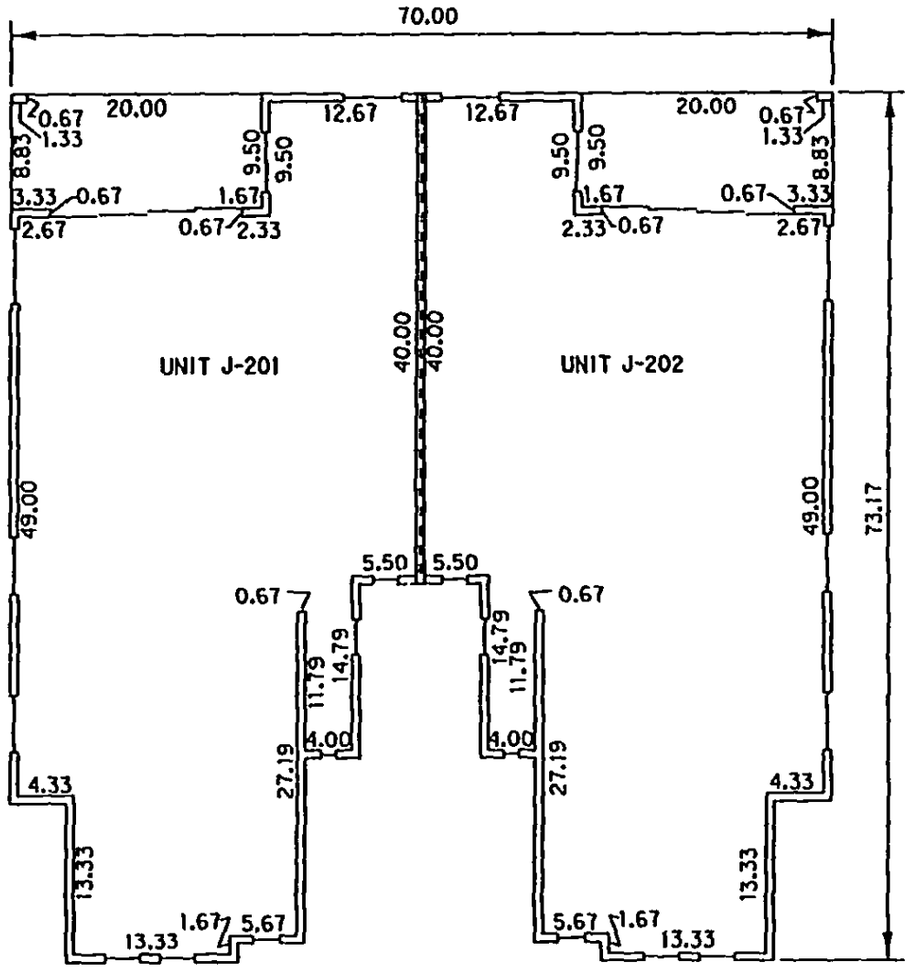

BUILDING J
SECOND FLOOR

	UNIT J-201	UNIT J-202
UPPER LIMITS:	31.31	31.31
LOWER LIMITS:	21.08	21.08

NOTES: DIMENSIONS SHOWN HEREON ARE IN FEET AND DECIMALS THEREOF.
DIMENSIONS AS SHOWN ARE SUBJECT TO NORMAL CONSTRUCTION TOLERANCES.
IMPROVEMENTS WITHIN THE CONDOMINIUM PROPERTY THAT ARE NOT UNITS OR LIMITED COMMON ELEMENTS ARE COMMON ELEMENTS

PBSJ
POST, BUCKLEY, SCHUH & JERNIGAN, INC.
ENGINEERS, PLANNERS & SURVEYORS
6326 PRESIDENTIAL COURT
FORT MYERS, FLORIDA 33919
(941)-482-7275

LEGAL DESCRIPTION
BAY POINTE AT BONITA BAY, A CONDOMINIUM
PHASE K

A portion of Sections 29 and 32 , Township 47 South, Range 25 East, Lee County, Florida being more particularly described as follows:

Commence at the Northeast corner of "Bonita Bay Unit Thirty-One, Phase I", as shown in the Public Records of Lee County, Florida, in Plat Book 56, Page 9; thence N26°09'25"W a distance of 910.16 feet to the **Point of Beginning**; thence S89°51'23"W a distance of 176.67 feet; thence N13°02'21"E a distance of 23.04 feet; thence N58°39'19"W a distance of 19.41 feet; thence N31°15'08"E a distance of 29.49 feet; thence N45°23'45"E a distance of 21.05 feet; thence N18°43'42"E a distance of 18.97 feet; thence N51°25'39"E a distance of 30.48 feet; thence N47°57'03"E a distance of 7.41 feet; thence N89°30'09"E a distance of 117.60 feet; thence N67°46'40"E a distance of 37.93 feet; thence S00°08'38"E a distance of 34.57 feet; thence S89°51'22"W a distance of 45.00 feet; thence S00°08'38"E a distance of 36.74 feet to a point of curvature of a tangent circular curve concave to the east; thence southerly along the arc of said curve, having for its elements, a radius of 122.50, a central angle of 26°52'37", a chord distance of 56.94 feet, a chord bearing of S13°34'56"E, an arc distance of 57.46 feet to a point of reverse curvature of a tangent circular curve concave to the west; thence southerly along the arc of said curve, having for its elements, a radius of 17.50 feet, a central angle of 09°17'01", a chord distance of 2.83 feet, a chord bearing of S22°22'45"E, an arc distance of 2.84 feet to the **Point of Beginning.**

Containing 18572.194 square feet, more or less.

OR2801 PG0898

BAY POINTE AT BONITA BAY, A CONDOMINIUM

MAY 1996

OR2801 PG0899

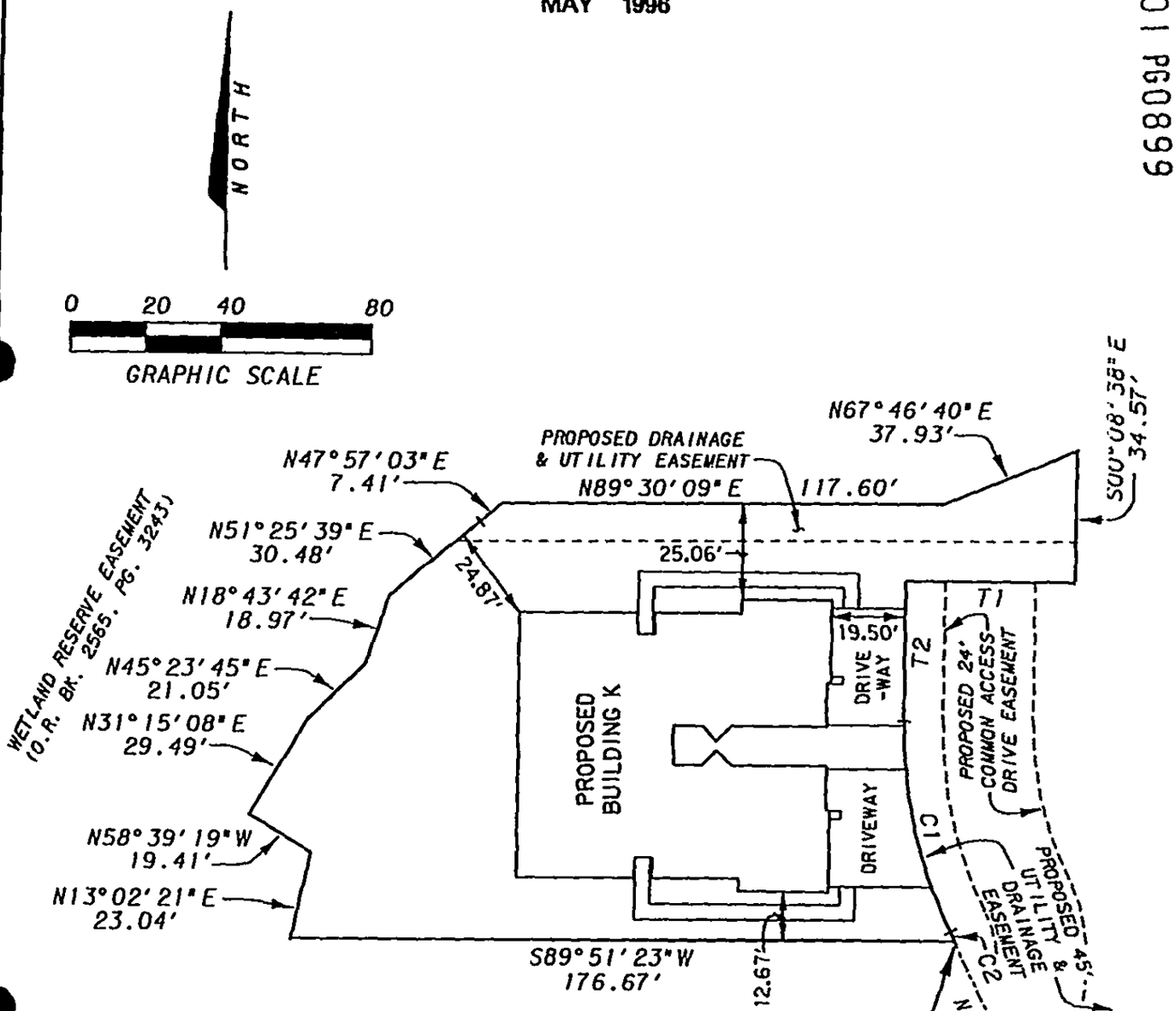

TANGENT TABLE		
NO.	BEARING	DISTANCE
T1	S89°51'22"W	45.00'
T2	S00°08'38"E	36.74'

CURVE TABLE					
NO.	RADIUS	Δ	ARC	CHORD	CHORD BEARING
C1	122.50'	26°52'37"	57.46'	56.94'	S13°34'56"E
C2	17.50'	09°17'01"	2.84'	2.83'	S22°22'45"E

POST, BUCKLEY, SCHUH & JERNIGAN, INC.
ENGINEERS, PLANNERS & SURVEYORS
6326 PRESIDENTIAL COURT
FORT MYERS, FLORIDA 33919
(941)-482-7275

PHASE K
SURVEY PLOT PLAN

BAY POINTE AT BONITA BAY, A CONDOMINIUM

MAY 1996

0 5 10 20
GRAPHIC SCALE

OR2801 PG0900

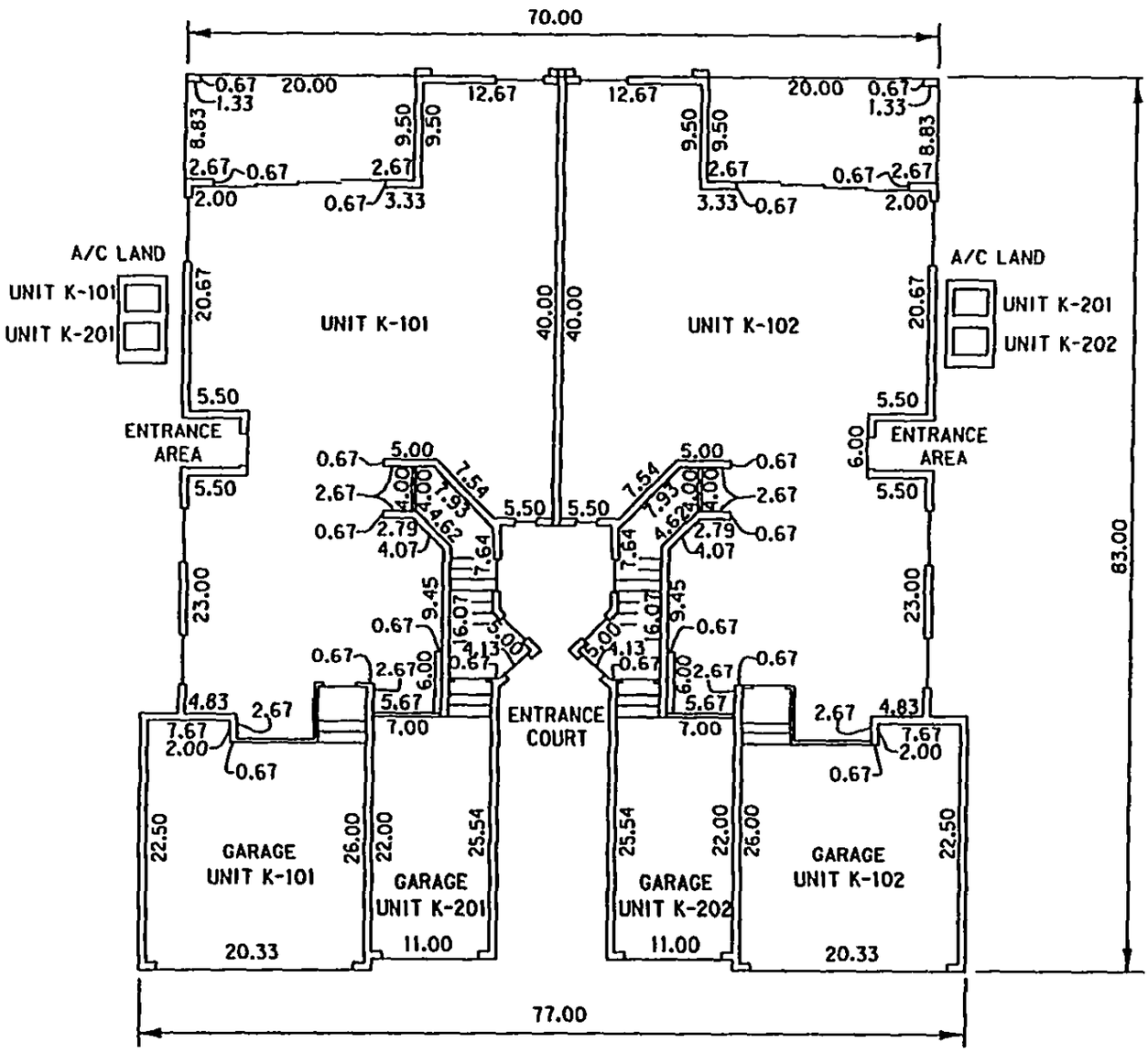

BUILDING K
FIRST FLOOR

	UNIT K-101	UNIT K-101 GARAGE	UNIT K-102	UNIT K-102 GARAGE	UNIT K-201 GARAGE	UNIT K-202 GARAGE
UPPER LIMITS:	20.25	20.25	20.25	20.25	20.25	20.25
LOWER LIMITS:	11.00	9.33	11.00	9.33	9.33	9.33

NOTES: DIMENSIONS SHOWN HEREON ARE IN FEET AND DECIMALS THEREOF.
DIMENSIONS AS SHOWN ARE SUBJECT TO NORMAL CONSTRUCTION TOLERANCES.
IMPROVEMENTS WITHIN THE CONDOMINIUM PROPERTY THAT ARE NOT UNITS OR LIMITED COMMON ELEMENTS ARE COMMON ELEMENTS

POST, BUCKLEY, SCHUH & JERNIGAN, INC.
ENGINEERS, PLANNERS & SURVEYORS
6326 PRESIDENTIAL COURT
FORT MYERS, FLORIDA 33919
(941)-482-7275

BAY POINTE AT BONITA BAY, A CONDOMINIUM

MAY 1998

0 5 10 20
GRAPHIC SCALE

OR2801 PG0901

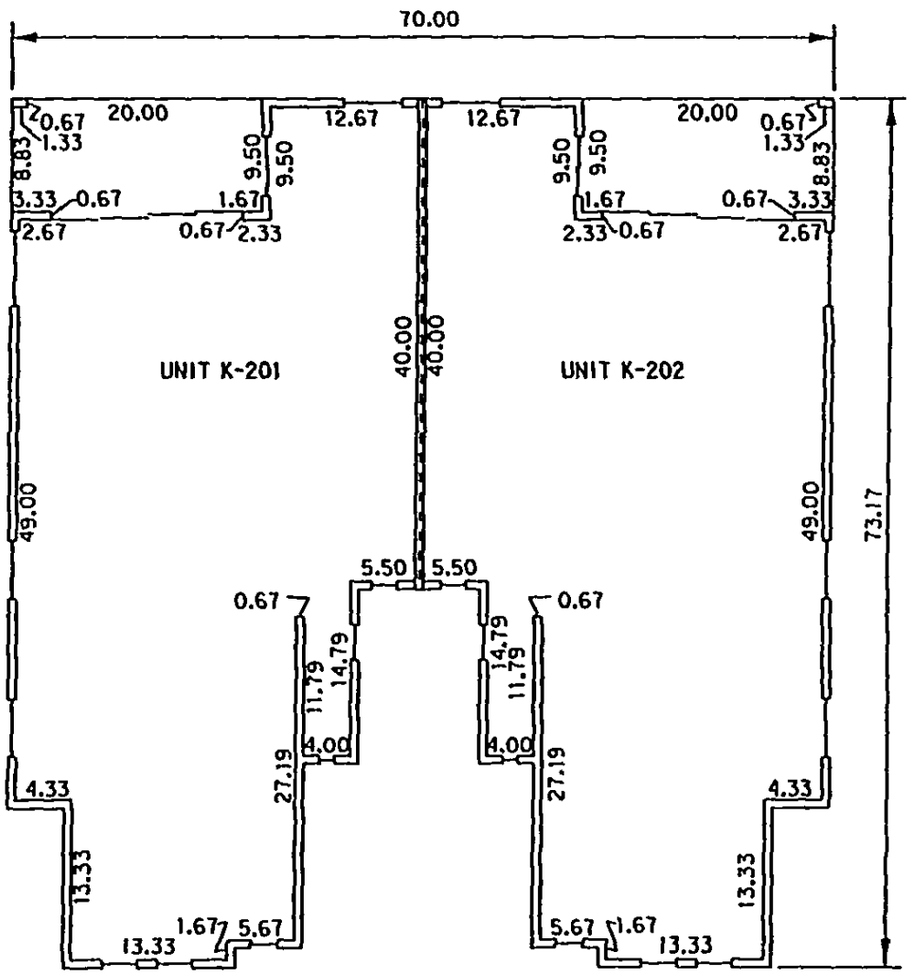

BUILDING K
SECOND FLOOR

	UNIT K-201	UNIT K-202
UPPER LIMITS:	31.31	31.31
LOWER LIMITS:	21.08	21.08

NOTES: DIMENSIONS SHOWN HEREON ARE IN FEET AND DECIMALS THEREOF.
DIMENSIONS AS SHOWN ARE SUBJECT TO NORMAL CONSTRUCTION TOLERANCES.
IMPROVEMENTS WITHIN THE CONDOMINIUM PROPERTY THAT ARE NOT UNITS OR LIMITED COMMON ELEMENTS ARE COMMON ELEMENTS

PBSJ
POST, BUCKLEY, SCHUH & JERNIGAN, INC.
ENGINEERS, PLANNERS & SURVEYORS
6326 PRESIDENTIAL COURT
FORT MYERS, FLORIDA 33919
(941)-482-7275

LEGAL DESCRIPTION
BAY POINTE AT BONITA BAY, A CONDOMINIUM
PHASE L

A portion of Sections 29 and 32 , Township 47 South, Range 25 East, Lee County, Florida being more particularly described as follows:

Commence at the Northeast corner of "Bonita Bay Unit Thirty-One, Phase I", as shown in the Public Records of Lee County, Florida, in Plat Book 56, Page 9; thence N10°44'02"W a distance of 867.72 feet to the **Point of Beginning**, said point lying on the arc of a non-tangent circular curve concave to the south; thence westerly along the arc of said curve, having for its elements, a radius of 772.50 feet, a central angle of 1°31'38", a chord distance of 20.59 feet, a chord bearing of S85°50'37"W, an arc distance of 20.59 feet; thence S85°04'48"W a distance of 134.69 feet to a point of curvature of a tangent circular curve concave to the south; thence westerly along the arc of said curve, having for its elements, a radius of 147.50 feet, a central angle of 10°44'55", a chord distance of 27.63 feet, a chord bearing of S79°42'21"W, an arc distance of 27.67 feet to a point of reverse curvature of a tangent circular curve concave to the northeast; thence northwesterly along the arc of said curve, having for its elements, a radius of 17.50 feet, a central angle of 82°16'43", a chord distance of 23.03 feet, a chord bearing of N64°31'46"W, an arc distance of 25.13 feet to a point of compound curvature of a tangent circular curve concave to the east; thence northerly along the arc of said curve, having for its elements, a radius of 77.50 feet, a central angle of 23°14'46", a chord distance of 31.23 feet, a chord bearing of N11°46'01"W, an arc distance of 31.44 feet; thence N00°08'38"W a distance of 71.31 feet; thence N67°46'40"E a distance of 22.07 feet; thence N88°46'23"E a distance of 39.58 feet; thence N38°24'14"E a distance of 31.65 feet; thence S44°55'47"E a distance of 13.74 feet; thence S71°29'48"E a distance of 25.52 feet; thence N84°12'32"E a distance of 27.25 feet; thence S86°41'35"E a distance of 21.85 feet; thence S77°46'24"E a distance of 13.52 feet; thence S85°37'31"E a distance of 23.92 feet; thence S89°37'32"E a distance of 4.88 feet; thence S02°34'58"E a distance of 106.85 feet to the **Point of Beginning.**

Containing 24260.738 square feet, more or less.

OR2801 PG0902

BAY POINTE AT BONITA BAY, A CONDOMINIUM

MAY 1996

ORB 2801 PG 0903

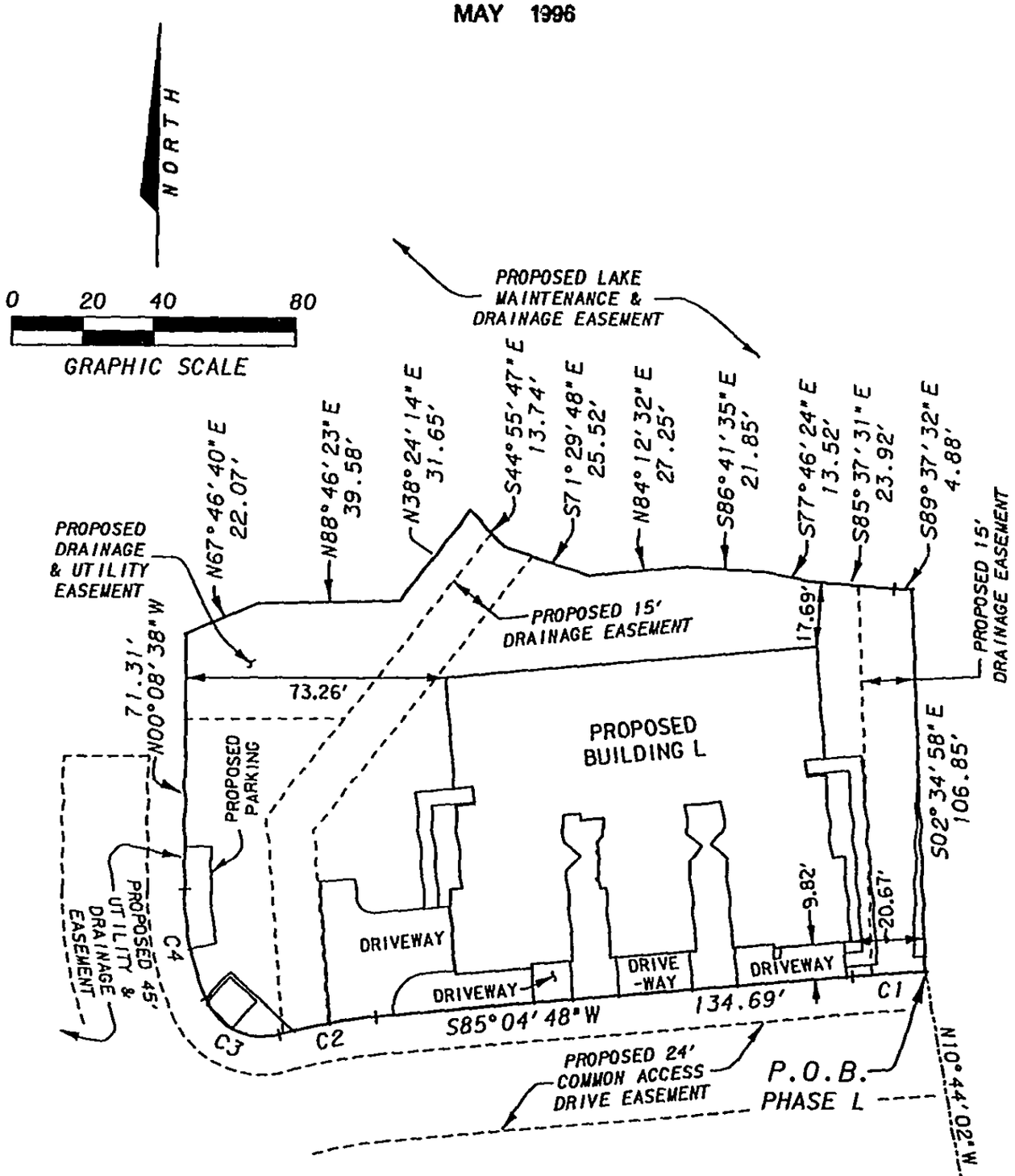

CURVE TABLE					
NO.	RADIUS	Δ	ARC	CHORD	CHORD BEARING
C1	772.50'	01°31'38"	20.59'	20.59'	S85°50'37"W
C2	147.50'	10°44'55"	27.67'	27.63'	S79°42'21"W
C3	17.50'	82°16'43"	25.13'	23.03'	N64°31'46"W
C4	77.50'	23°14'46"	31.44'	31.23'	N11°46'01"W

PBSJ
POST, BUCKLEY, SCHUH & JERNIGAN, INC.
ENGINEERS, PLANNERS & SURVEYORS
6326 PRESIDENTIAL COURT
FORT MYERS, FLORIDA 33919
(941)-482-7275

PHASE L
SURVEY PLOT PLAN

BAY POINTE AT BONITA BAY, A CONDOMINIUM

MAY 1996

OR2801 PG0904

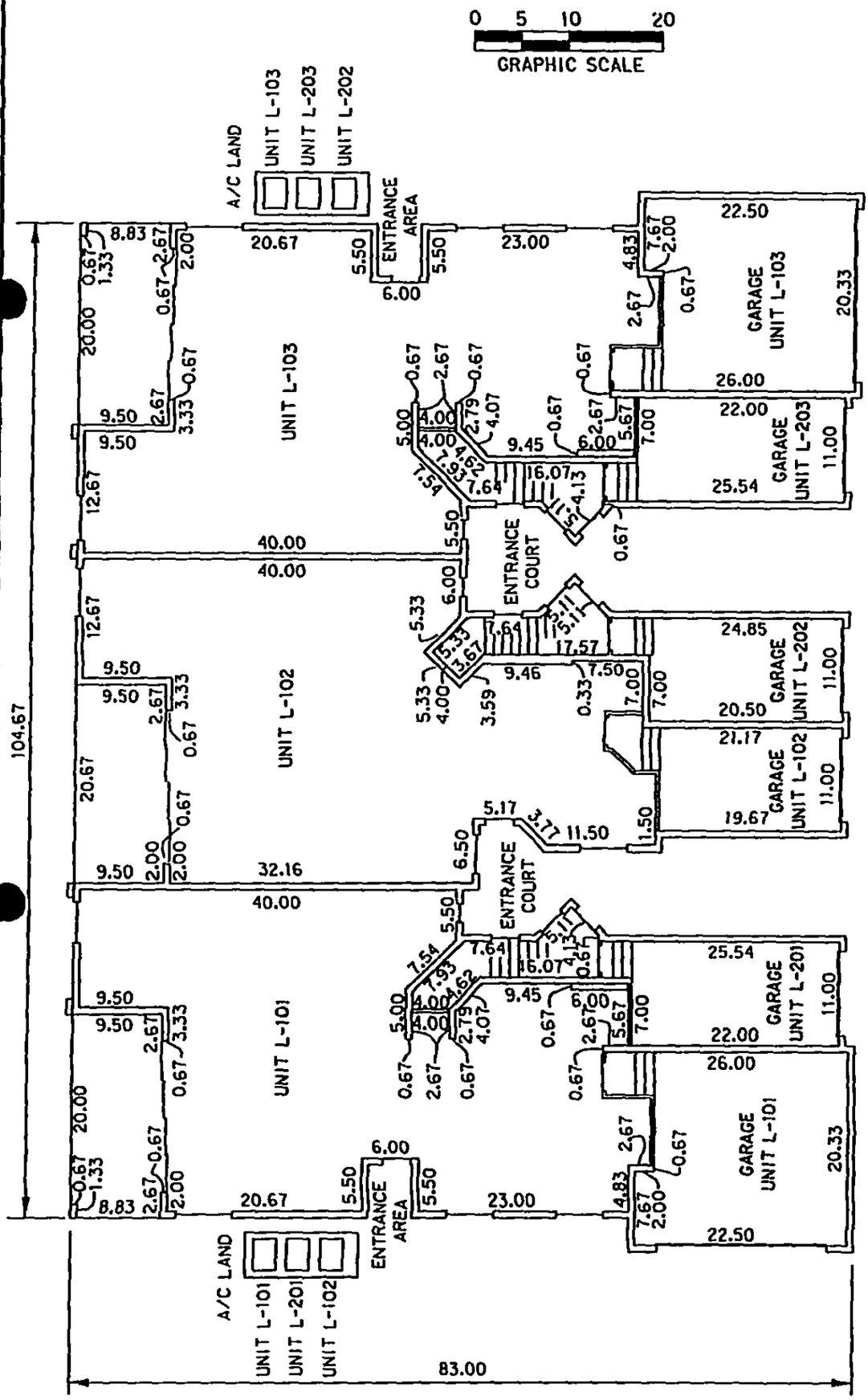

	UNIT L-101	UNIT L-101 GARAGE	UNIT L-102	UNIT L-102 GARAGE	UNIT L-103	UNIT L-103 GARAGE	UNIT L-201 GARAGE	UNIT L-202 GARAGE	UNIT L-203 GARAGE
UPPER LIMITS:	20.25	20.25	20.25	20.25	20.25	20.25	20.25	20.25	20.25
LOWER LIMITS:	11.00	9.33	11.00	9.33	11.00	9.33	9.33	9.33	9.33

NOTES: DIMENSIONS SHOWN HEREON ARE IN FEET AND DECIMALS THEREOF.
DIMENSIONS AS SHOWN ARE SUBJECT TO NORMAL CONSTRUCTION TOLERANCES.
IMPROVEMENTS WITHIN THE CONDOMINIUM PROPERTY THAT ARE NOT UNITS OR LIMITED COMMON ELEMENTS ARE COMMON ELEMENTS

PBS&J
POST, BUCKLEY, SCHUH & JERNIGAN, INC.
ENGINEERS, PLANNERS & SURVEYORS
6326 PRESIDENTIAL COURT
FORT MYERS, FLORIDA 33919
(941)-482-7275

BAY POINTE AT BONITA BAY, A CONDOMINIUM

MAY 1996

0 5 10 20
GRAPHIC SCALE

OR2801 PG0905

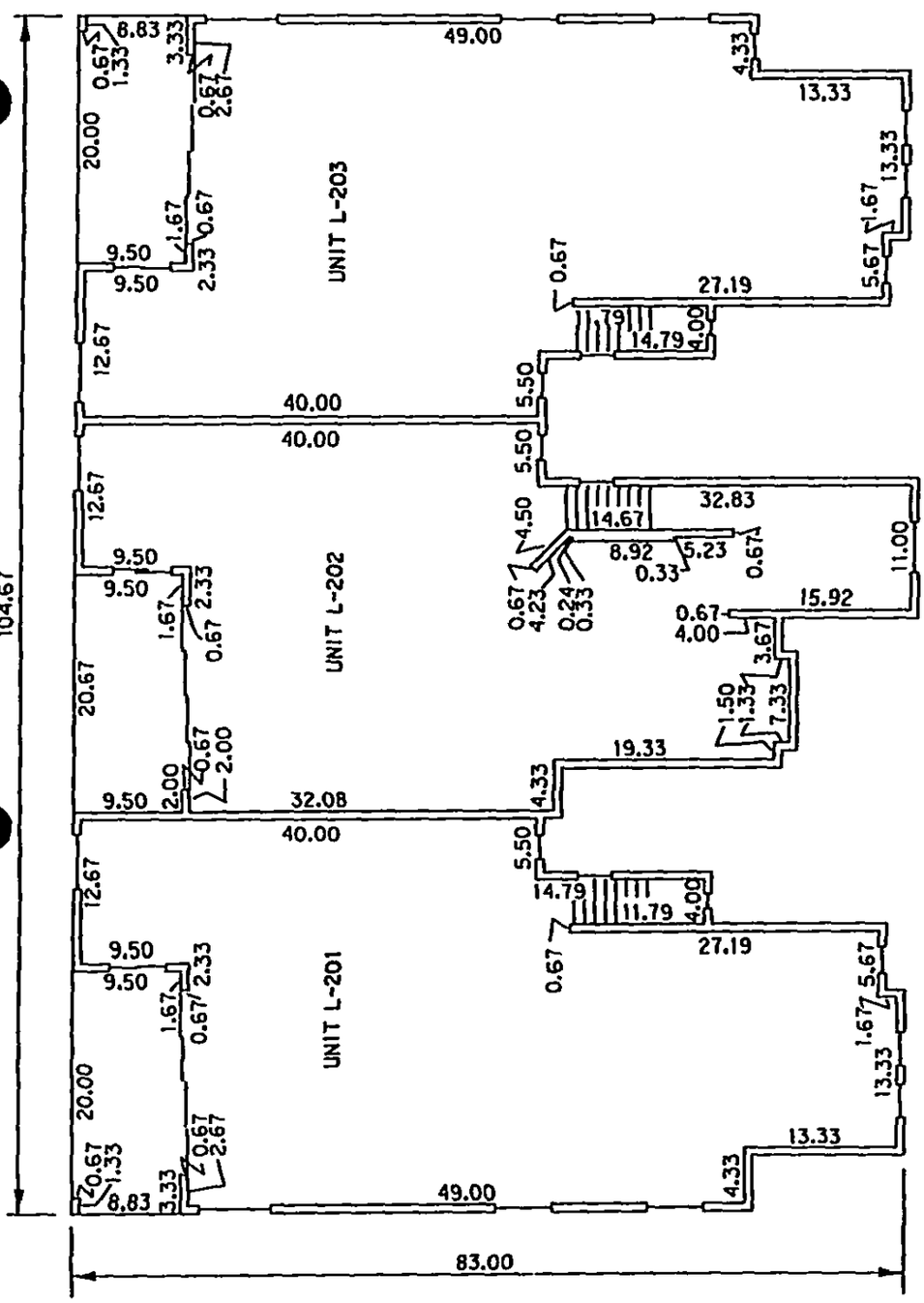

BUILDING L
SECOND FLOOR

	UNIT L-201	UNIT L-202	UNIT L-203
UPPER LIMITS:	31.31	31.31	31.31
LOWER LIMITS:	21.08	21.08	21.08

NOTES: DIMENSIONS SHOWN HEREON ARE IN FEET AND DECIMALS THEREOF.
DIMENSIONS AS SHOWN ARE SUBJECT TO NORMAL CONSTRUCTION TOLERANCES.
IMPROVEMENTS WITHIN THE CONDOMINIUM PROPERTY THAT ARE NOT UNITS OR LIMITED COMMON ELEMENTS ARE COMMON ELEMENTS

PBSJ
POST, BUCKLEY, SCHUH & JERNIGAN, INC.
ENGINEERS, PLANNERS & SURVEYORS
6326 PRESIDENTIAL COURT
FORT MYERS, FLORIDA 33919
(941)-482-7275

LEGAL DESCRIPTION
BAY POINTE AT BONITA BAY, A CONDOMINIUM
PHASE M

A portion of Sections 29 and 32 , Township 47 South, Range 25 East, Lee County, Florida being more particularly described as follows:

Commence at the Northeast corner of "Bonita Bay Unit Thirty-One, Phase I", as shown in the Public Records of Lee County, Florida, in Plat Book 56, Page 9; thence N04°34'58"W a distance of 855.16 feet to the **Point of Beginning**, said point lying on the arc of a non-tangent circular curve concave to the south; thence westerly along the arc of said curve, having for its elements a radius of 772.50 feet, a central angle of 06°55'23", a chord distance of 93.28 feet, a chord bearing of N89°55'53"W, an arc distance of 93.34 feet; thence N02°34'58"W a distance of 106.85 feet; thence S89°37'32"E a distance of 16.15 feet; thence S89°10'54"E a distance of 19.74 feet; thence S85°22'55"E a distance of 18.03 feet; thence S83°27'49"E a distance of 23.81 feet; thence S84°51'12"E a distance of 22.43 feet; thence S01°00'11"W a distance of 100.31feet to the **Point of Beginning.**

Containing 10005.982 square feet, more or less.

OR 2801 PG 0906

BAY POINTE AT BONITA BAY, A CONDOMINIUM

MAY 1996

OR2801 PG0907

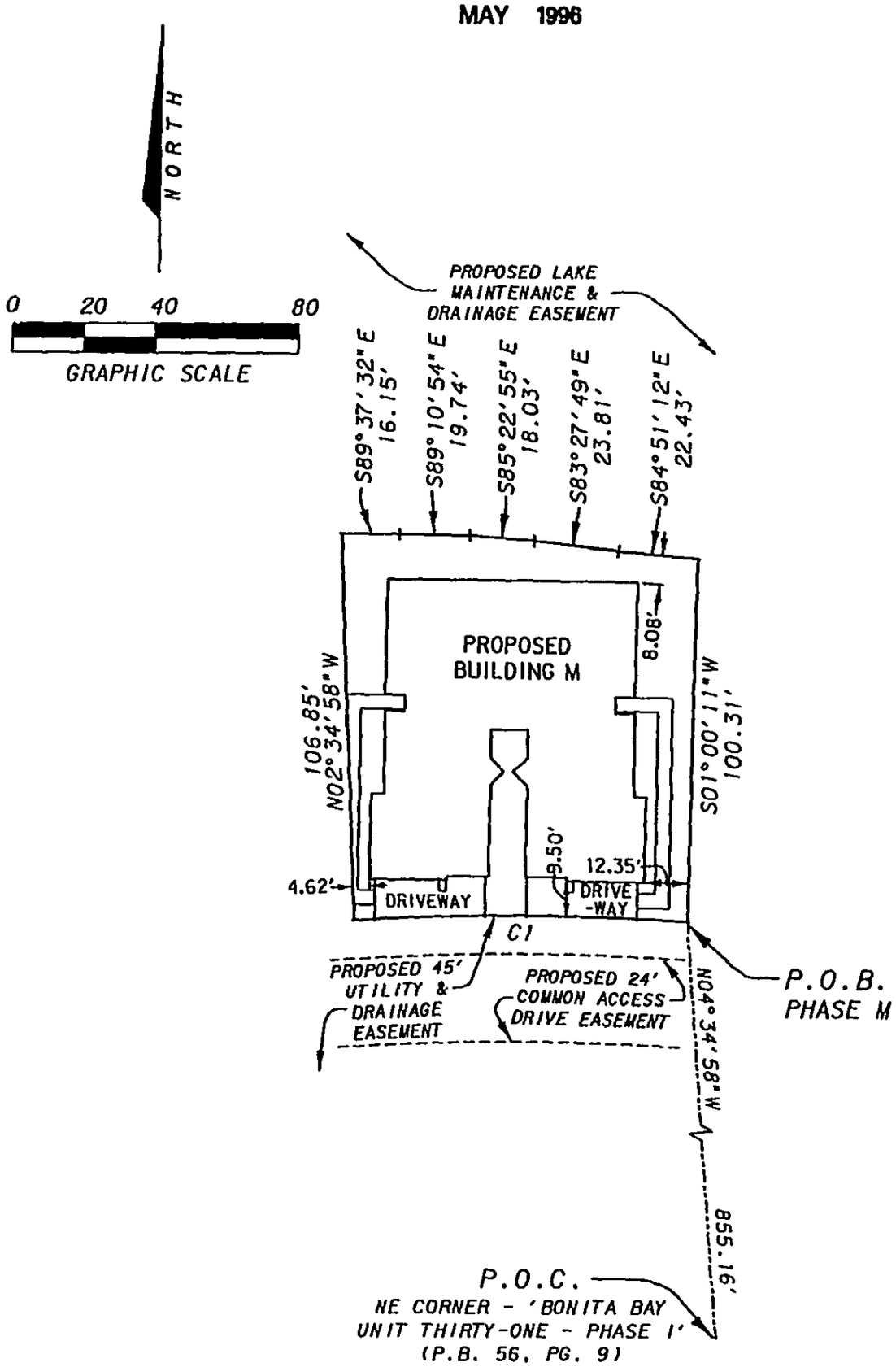

CURVE TABLE					
NO.	RADIUS	Δ	ARC	CHORD	CHORD BEARING
C1	772.50'	06°55'23"	93.34'	93.28'	N89°55'53"W

POST, BUCKLEY, SCHUH & JERNIGAN, INC.
ENGINEERS, PLANNERS & SURVEYORS
6326 PRESIDENTIAL COURT
FORT MYERS, FLORIDA 33919
(941)-482-7275

PHASE M
SURVEY PLOT PLAN

BAY POINTE AT BONITA BAY, A CONDOMINIUM

MAY 1996

0 5 10 20
GRAPHIC SCALE

OR2801 PG0908

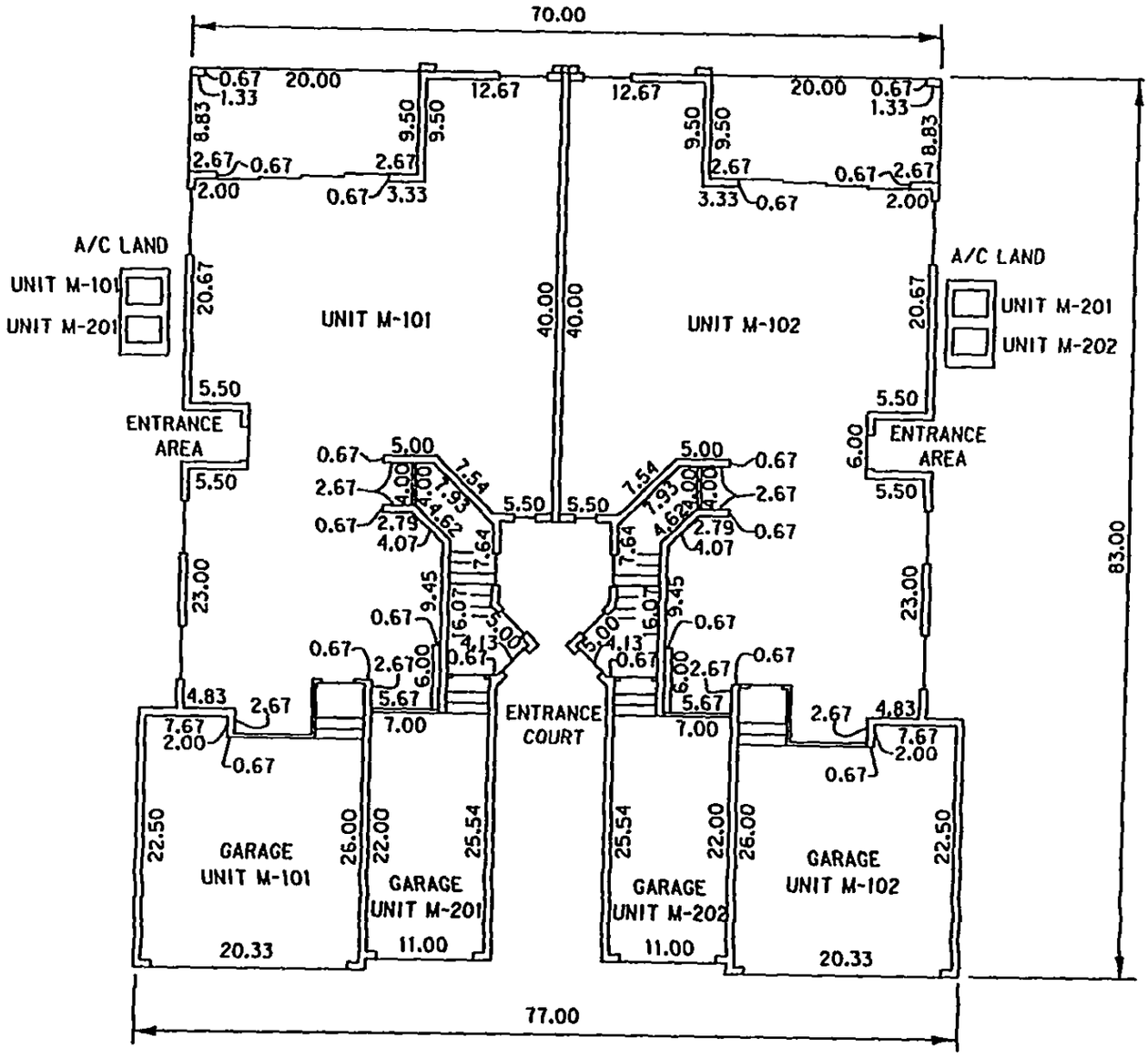

BUILDING M
FIRST FLOOR

	UNIT M-101	UNIT M-101 GARAGE	UNIT M-102	UNIT M-102 GARAGE	UNIT M-201 GARAGE	UNIT M-202 GARAGE
UPPER LIMITS:	20.25	20.25	20.25	20.25	20.25	20.25
LOWER LIMITS:	11.00	9.33	11.00	9.33	9.33	9.33

NOTES: DIMENSIONS SHOWN HEREON ARE IN FEET AND DECIMALS THEREOF.
DIMENSIONS AS SHOWN ARE SUBJECT TO NORMAL CONSTRUCTION TOLERANCES.
IMPROVEMENTS WITHIN THE CONDOMINIUM PROPERTY THAT ARE NOT UNITS OR LIMITED COMMON ELEMENTS ARE COMMON ELEMENTS

PBS&J
POST, BUCKLEY, SCHUH & JERNIGAN, INC.
ENGINEERS, PLANNERS & SURVEYORS
6326 PRESIDENTIAL COURT
FORT MYERS, FLORIDA 33919
(941)-482-7275

BAY POINTE AT BONITA BAY, A CONDOMINIUM

MAY 1996

0 5 10 20

GRAPHIC SCALE

OR2801 PG0909

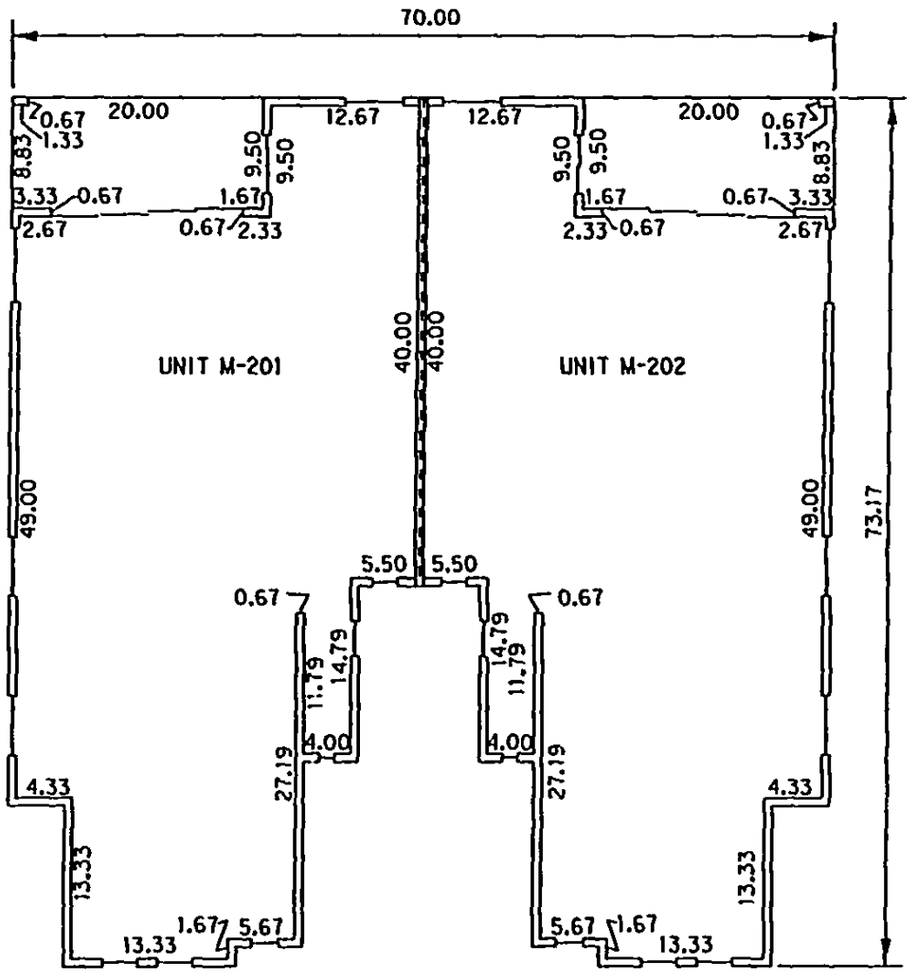

BUILDING M
SECOND FLOOR

	UNIT M-201	UNIT M-202
UPPER LIMITS:	31.31	31.31
LOWER LIMITS:	21.08	21.08

NOTES: DIMENSIONS SHOWN HEREON ARE IN FEET AND DECIMALS THEREOF.
DIMENSIONS AS SHOWN ARE SUBJECT TO NORMAL CONSTRUCTION TOLERANCES.
IMPROVEMENTS WITHIN THE CONDOMINIUM PROPERTY THAT ARE NOT UNITS OR LIMITED COMMON ELEMENTS ARE COMMON ELEMENTS

PBSJ
POST, BUCKLEY, SCHUH & JERNIGAN, INC.
ENGINEERS, PLANNERS & SURVEYORS
6326 PRESIDENTIAL COURT
FORT MYERS, FLORIDA 33919
(941)-482-7275

LEGAL DESCRIPTION
BAY POINTE AT BONITA BAY, A CONDOMINIUM
PHASE N

A portion of Sections 29 and 32 , Township 47 South, Range 25 East, Lee County, Florida being more particularly described as follows:

Commence at the Northeast corner of "Bonita Bay Unit Thirty-One, Phase I", as shown in the Public Records of Lee County, Florida, in Plat Book 56, Page 9; thence N02°15'12"E a distance of 844.59 feet to the **Point of Beginning**; thence N85°05'39"W a distance of 83.34 feet to a point of curvature of a tangent circular curve concave to the south, having for its elements, a radius of 772.50 feet, a central angle of 01°22'33", a chord distance of 18.55 feet, a chord bearing of N85°46'55"W, an arc distance of 18.55 feet; thence N01°00'11"E a distance of 100.31 feet; thence N88°36'30"E a distance of 19.28 feet; thence S58°44'00"E a distance of 6.09 feet; thence S85°05'38"E a distance of 84.10 feet; thence S04°54'21"W a distance of 99.26 feet to the **Point of Beginning.**

Containing 10491.891 square feet, more or less.

OR2801 PG0910

BAY POINTE AT BONITA BAY, A CONDOMINIUM

MAY 1996

OR2801 PG0911

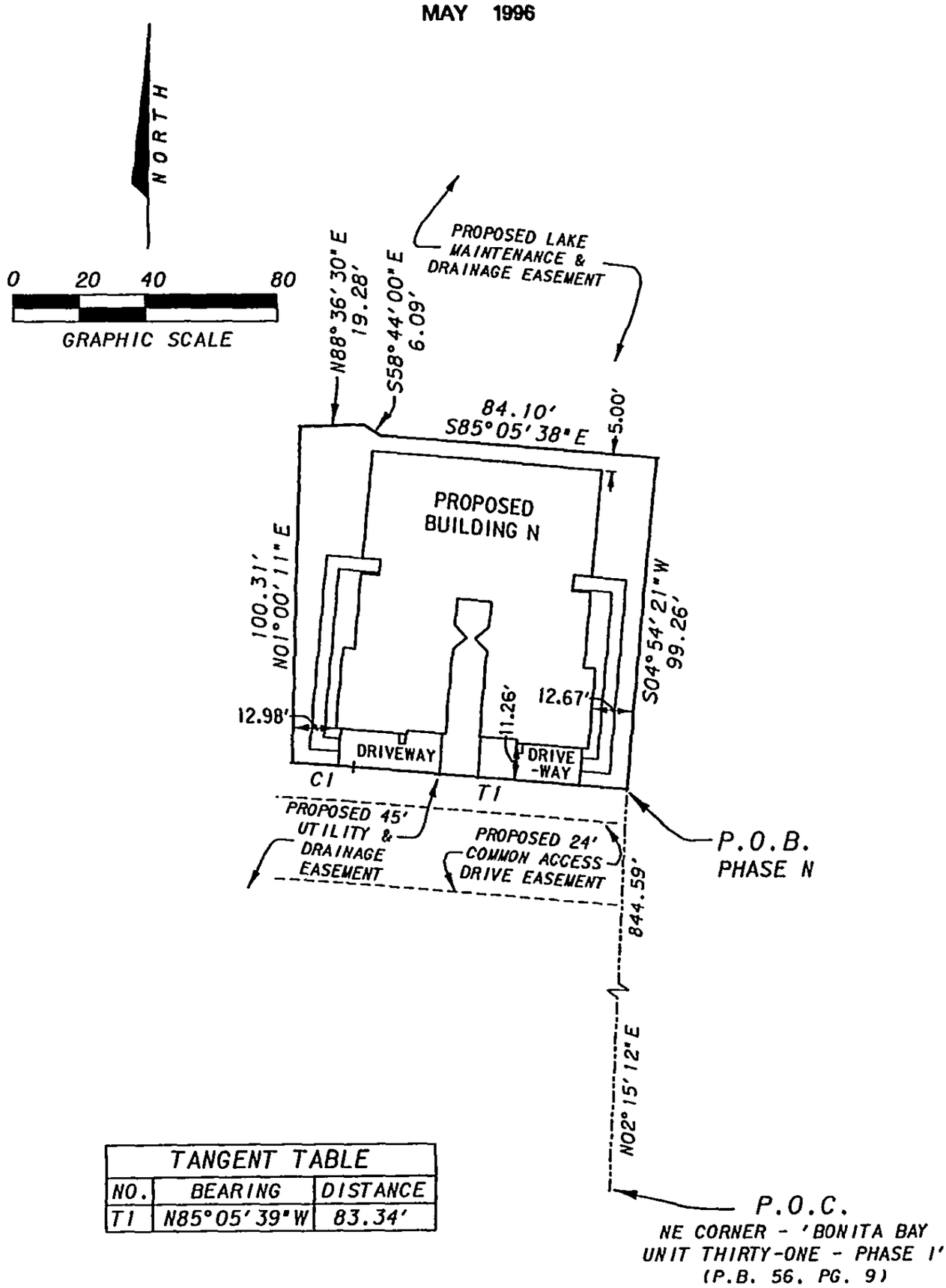

TANGENT TABLE		
NO.	BEARING	DISTANCE
T1	N85°05'39"W	83.34'

CURVE TABLE					
NO.	RADIUS	Δ	ARC	CHORD	CHORD BEARING
C1	772.50'	01°22'33"	18.55'	18.55'	N85°46'55"W

POST, BUCKLEY, SCHUH & JERNIGAN, INC.
ENGINEERS, PLANNERS & SURVEYORS
6326 PRESIDENTIAL COURT
FORT MYERS, FLORIDA 33919
(941)-482-7275

PHASE N
SURVEY PLOT PLAN

BAY POINTE AT BONITA BAY, A CONDOMINIUM

MAY 1996

0 5 10 20

GRAPHIC SCALE

OR2801 PG0912

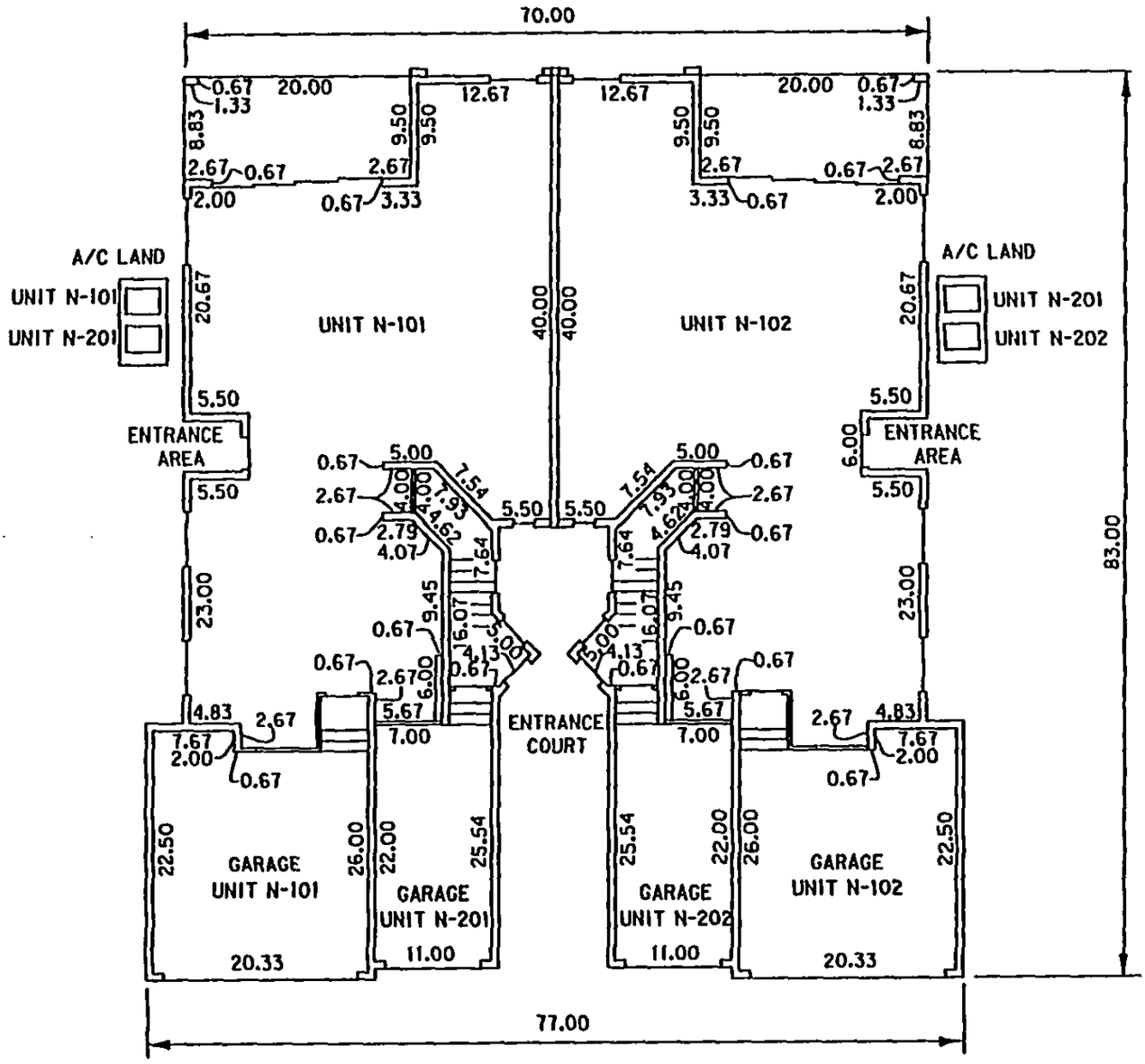

BUILDING N
FIRST FLOOR

	UNIT N-101	UNIT N-101 GARAGE	UNIT N-102	UNIT N-102 GARAGE	UNIT N-201 GARAGE	UNIT N-202 GARAGE
UPPER LIMITS:	20.25	20.25	20.25	20.25	20.25	20.25
LOWER LIMITS:	11.00	9.33	11.00	9.33	9.33	9.33

NOTES: DIMENSIONS SHOWN HEREON ARE IN FEET AND DECIMALS THEREOF.
DIMENSIONS AS SHOWN ARE SUBJECT TO NORMAL CONSTRUCTION TOLERANCES.
IMPROVEMENTS WITHIN THE CONDOMINIUM PROPERTY THAT ARE NOT UNITS OR LIMITED COMMON ELEMENTS ARE COMMON ELEMENTS

PBSJ
POST, BUCKLEY, SCHUH & JERNIGAN, INC.
ENGINEERS, PLANNERS & SURVEYORS
6326 PRESIDENTIAL COURT
FORT MYERS, FLORIDA 33919
(941)-482-7275

BAY POINTE AT BONITA BAY, A CONDOMINIUM

MAY 1996

0 5 10 20

GRAPHIC SCALE

OR2801 PG0913

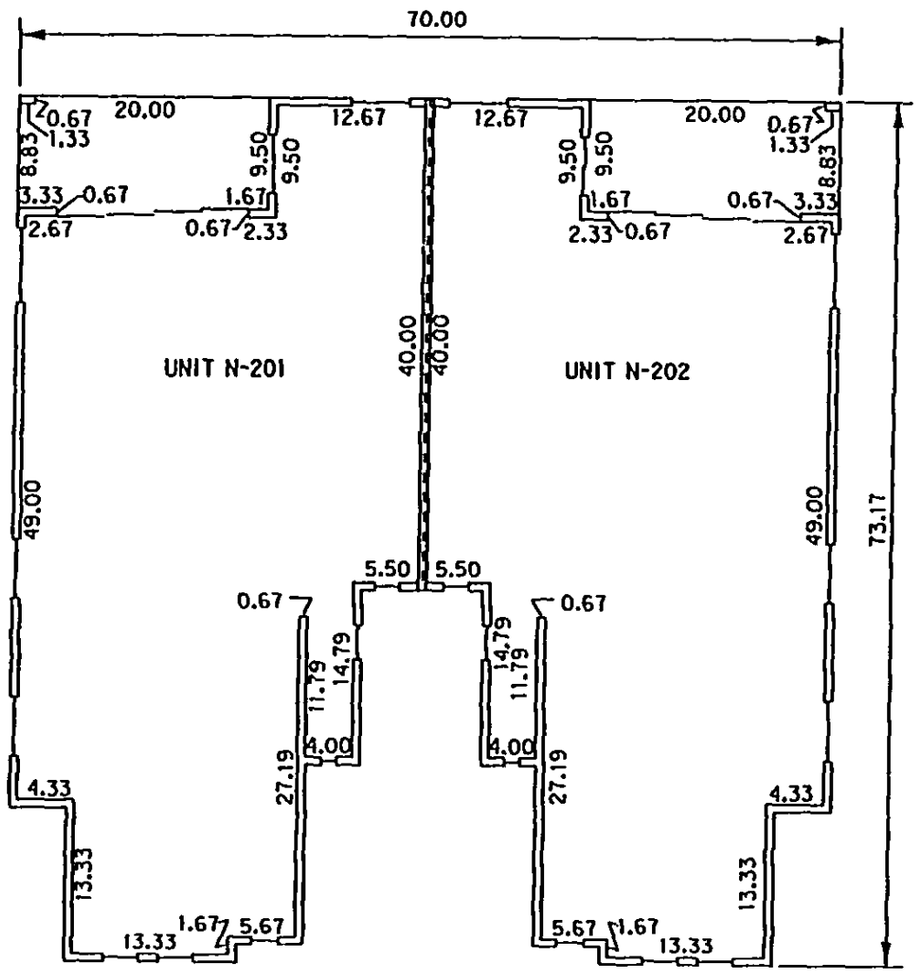

BUILDING N
SECOND FLOOR

	UNIT N-201	UNIT N-202
UPPER LIMITS:	31.31	31.31
LOWER LIMITS:	21.08	21.08

NOTES: DIMENSIONS SHOWN HEREON ARE IN FEET AND DECIMALS THEREOF.
DIMENSIONS AS SHOWN ARE SUBJECT TO NORMAL CONSTRUCTION TOLERANCES.
IMPROVEMENTS WITHIN THE CONDOMINIUM PROPERTY THAT ARE NOT UNITS OR LIMITED COMMON ELEMENTS ARE COMMON ELEMENTS

PBSJ
POST, BUCKLEY, SCHUH & JERNIGAN, INC.
ENGINEERS, PLANNERS & SURVEYORS
6326 PRESIDENTIAL COURT
FORT MYERS, FLORIDA 33919
(941)-482-7275

LEGAL DESCRIPTION
BAY POINTE AT BONITA BAY, A CONDOMINIUM
PHASE O

A portion of Sections 29 and 32 , Township 47 South, Range 25 East, Lee County, Florida being more particularly described as follows:

Commence at the Northeast corner of "Bonita Bay Unit Thirty-One, Phase I", as shown in the Public Records of Lee County, Florida, in Plat Book 56, Page 9; thence N02°15'12"E a distance of 844.59 feet to the **Point of Beginning**; thence N04°54'21"E a distance of 99.26 feet; thence S85°05'38"E a distance of 8.68 feet; thence N71°13'16"E a distance of 8.70 feet; thence N72°08'49"E a distance of 20.39 feet; thence N73°17'37"E a distance of 15.95 feet; thence N85°29'22"E a distance of 19.73 feet; thence N84°13'43"E a distance of 19.47 feet; thence S10°38'04"E a distance of 128.04 feet; thence N85°05'39"W a distance of 123.18 feet to the **Point of Beginning.**

Containing 12098.004 square feet, more or less.

OR2801 PG0914

BAY POINTE AT BONITA BAY, A CONDOMINIUM

MAY 1998

OR2801 PG0915

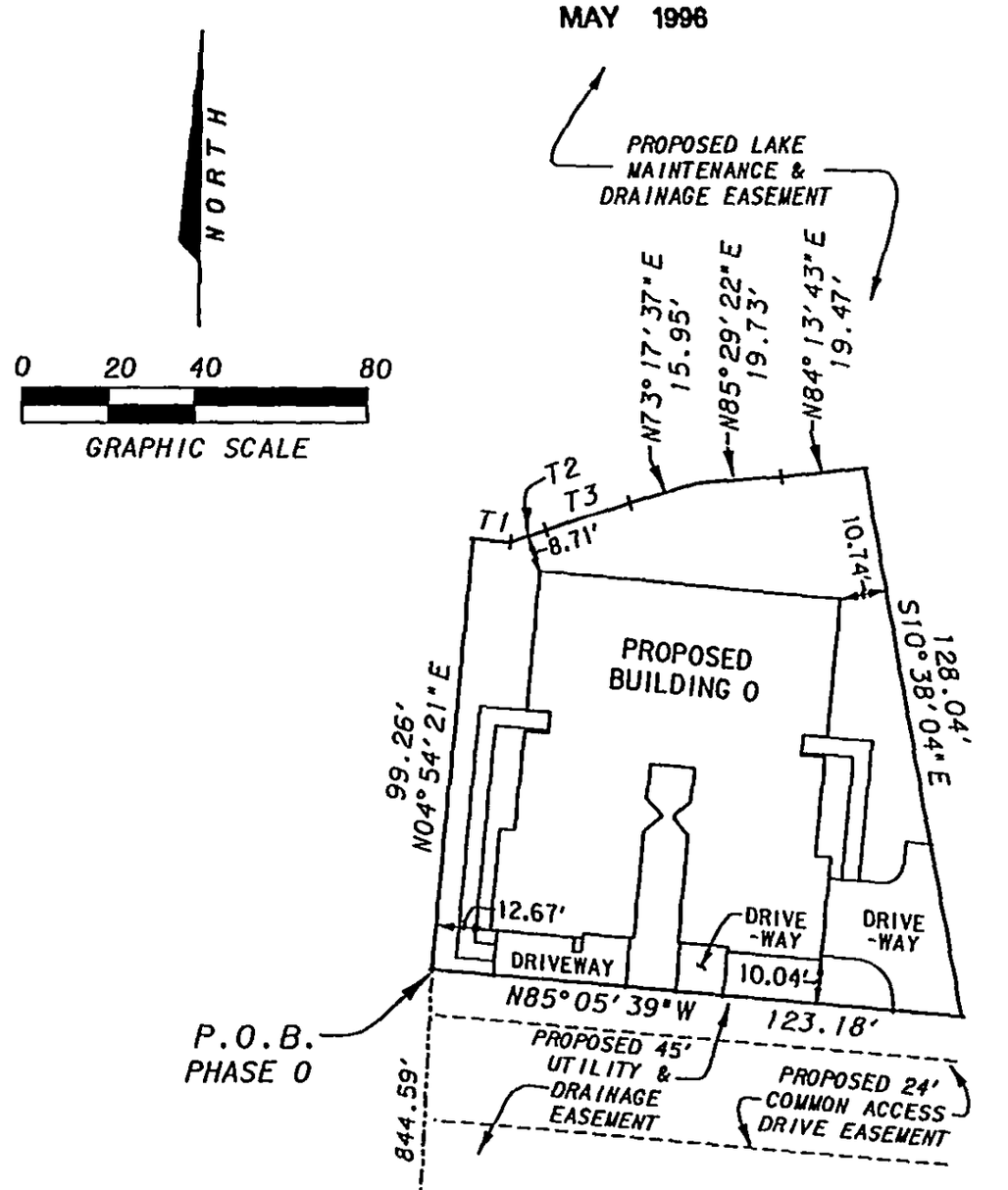

TANGENT TABLE		
NO.	BEARING	DISTANCE
T1	S85°05'38"E	8.68'
T2	N71°13'16"E	8.70'
T3	N72°08'49"E	20.39'

POST, BUCKLEY, SCHUH & JERNIGAN, INC.
ENGINEERS, PLANNERS & SURVEYORS
6326 PRESIDENTIAL COURT
FORT MYERS, FLORIDA 33919
(941)-482-7275

PHASE 0
SURVEY PLOT PLAN

BAY POINTE AT BONITA BAY, A CONDOMINIUM

MAY 1996

0 5 10 20

GRAPHIC SCALE

OR2801 PG0916

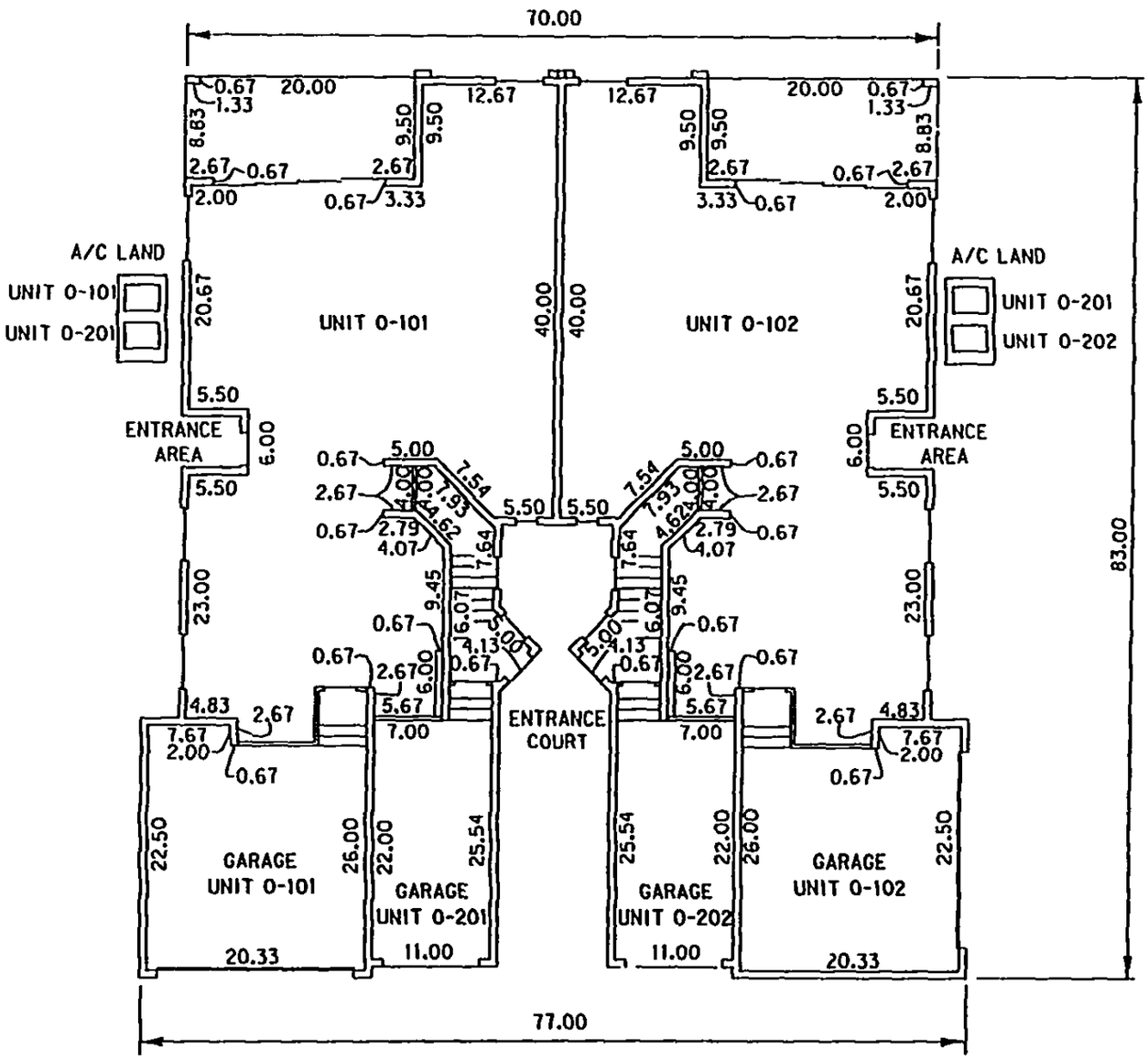

BUILDING 0
FIRST FLOOR

	UNIT 0-101	UNIT 0-101 GARAGE	UNIT 0-102	UNIT 0-102 GARAGE	UNIT 0-201 GARAGE	UNIT 0-202 GARAGE
UPPER LIMITS:	20.25	20.25	20.25	20.25	20.25	20.25
LOWER LIMITS:	11.00	9.33	11.00	9.33	9.33	9.33

NOTES: DIMENSIONS SHOWN HEREON ARE IN FEET AND DECIMALS THEREOF.
DIMENSIONS AS SHOWN ARE SUBJECT TO NORMAL CONSTRUCTION TOLERANCES.
IMPROVEMENTS WITHIN THE CONDOMINIUM PROPERTY THAT ARE NOT UNITS OR LIMITED COMMON ELEMENTS ARE COMMON ELEMENTS

PBSJ
POST, BUCKLEY, SCHUH & JERNIGAN, INC.
ENGINEERS, PLANNERS & SURVEYORS
6326 PRESIDENTIAL COURT
FORT MYERS, FLORIDA 33919
(941)-482-7275

BAY POINTE AT BONITA BAY, A CONDOMINIUM

MAY 1996

0 5 10 20

GRAPHIC SCALE

OR2801 PG0917

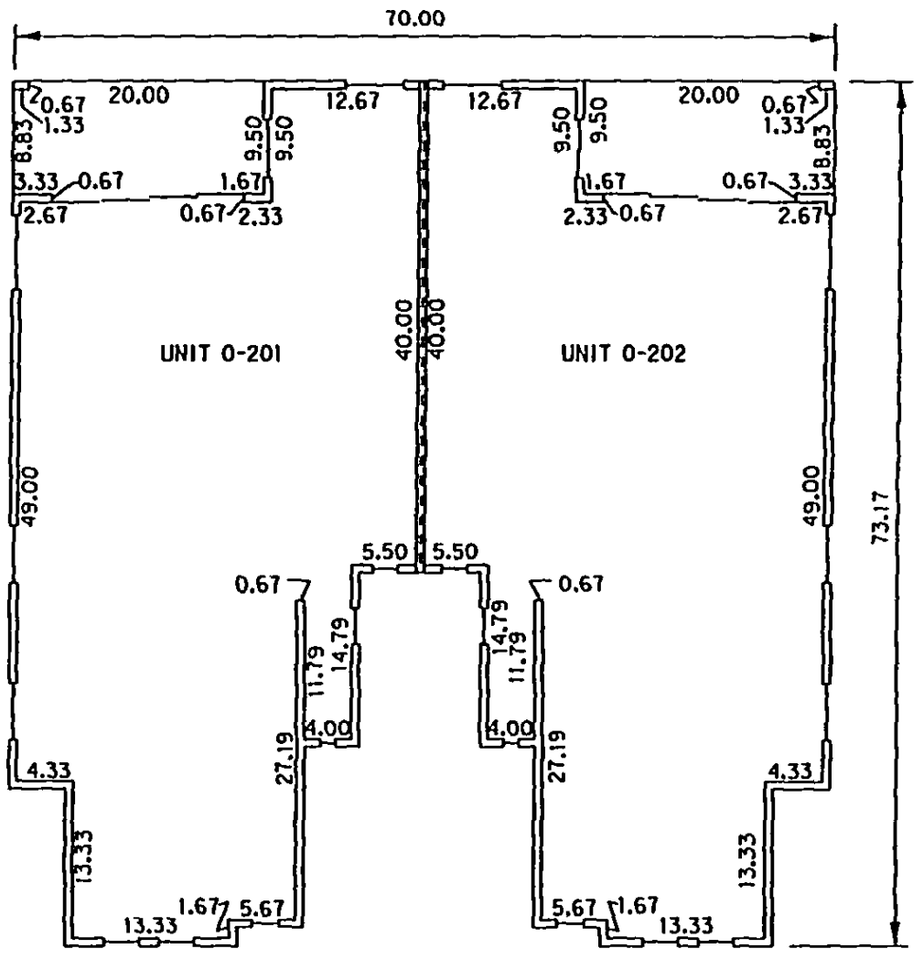

BUILDING O
SECOND FLOOR

	UNIT 0-201	UNIT 0-202
UPPER LIMITS:	31.31	31.31
LOWER LIMITS:	21.08	21.08

NOTES: DIMENSIONS SHOWN HEREON ARE IN FEET AND DECIMALS THEREOF.
DIMENSIONS AS SHOWN ARE SUBJECT TO NORMAL CONSTRUCTION TOLERANCES.
IMPROVEMENTS WITHIN THE CONDOMINIUM PROPERTY THAT ARE NOT UNITS OR LIMITED COMMON ELEMENTS ARE COMMON ELEMENTS

PBSJ
POST, BUCKLEY, SCHUH & JERNIGAN, INC.
ENGINEERS, PLANNERS & SURVEYORS
6326 PRESIDENTIAL COURT
FORT MYERS, FLORIDA 33919
(941)-482-7275

LEGAL DESCRIPTION
BAY POINTE AT BONITA BAY, A CONDOMINIUM
PHASE P

A portion of Sections 29 and 32 , Township 47 South, Range 25 East, Lee County, Florida being more particularly described as follows:

Commence at the Northeast corner of "Bonita Bay Unit Thirty-One, Phase I", as shown in the Public Records of Lee County, Florida, in Plat Book 56, Page 9; thence N10°35'53"E a distance of 847.86 feet to the **Point of Beginning**; thence N10°38'04"W a distance of 128.04 feet; thence N87°56'41"E a distance of 22.61 feet; thence N67°18'49"E a distance of 21.46 feet; thence N49°10'35"E a distance of 19.03 feet; N30°29'41"E a distance of 0.72 feet; thence S58°50'44"E a distance of 135.23 feet to a point lying on the arc of a non-tangent circular curve concave to the northwest; thence southwesterly along the arc of said curve, having for its elements, a radius of 792.08 feet, a central angle of 02°57'18"a chord distance of 40.85, a chord bearing of S36°28'28"W, an arc distance of 40.85 feet to the point of compound curvature of a tangent circular curve concave to the northwest; thence southwesterly along the arc of said curve, having for its elements, a radius of 122.50 feet, a central angle of 56°57'15", a chord distance of 116.82 feet, a chord bearing of S66°25'44"W, an arc distance of 121.77 feet; thence N85°05'39"W a distance of 17.97 feet to the **Point of Beginning.**

Containing 16477.022 square feet, more or less.

OR2801 PG0918

BAY POINTE AT BONITA BAY, A CONDOMINIUM

MAY 1996

OR2801 PG0919

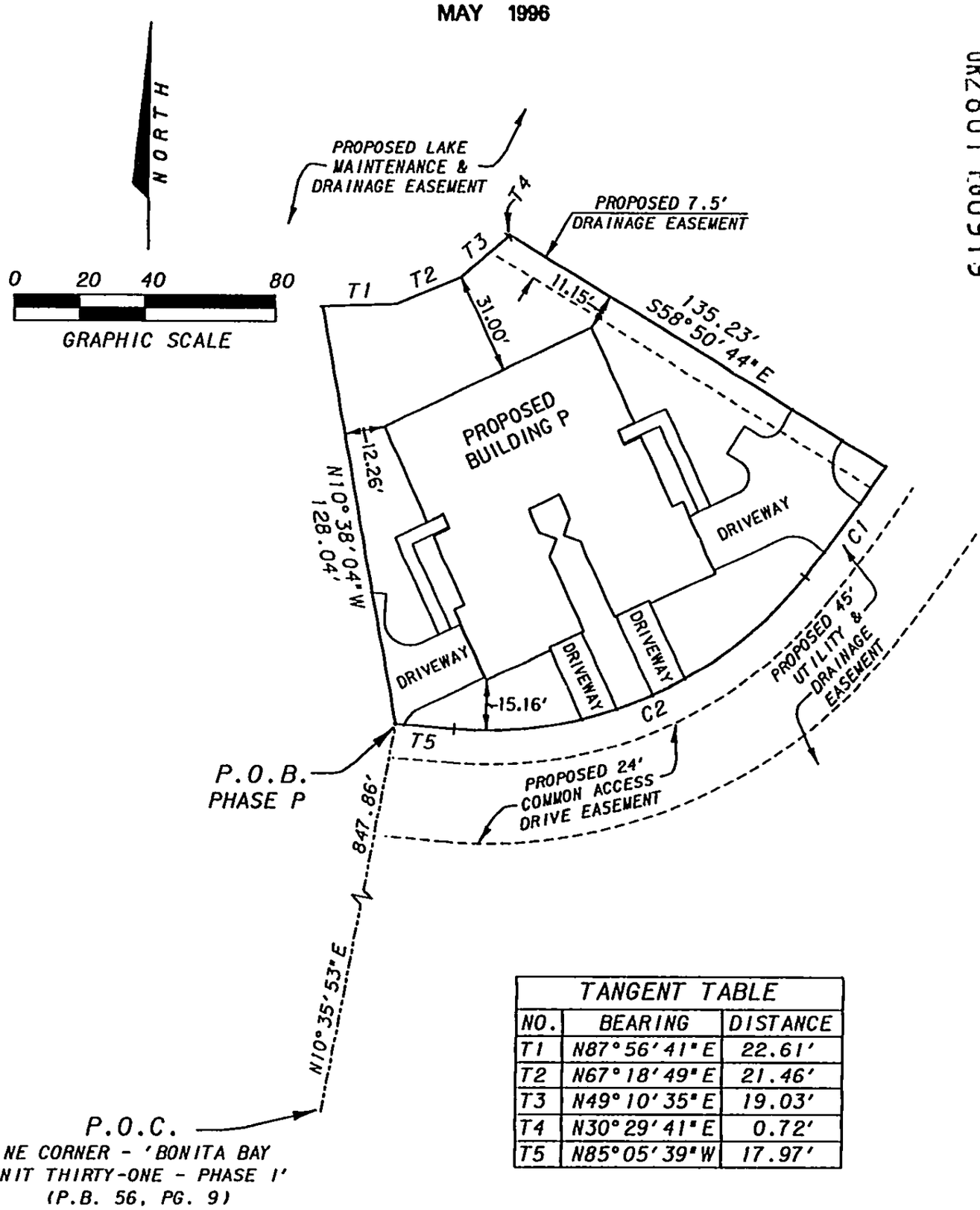

TANGENT TABLE		
NO.	BEARING	DISTANCE
T1	N87°56'41"E	22.61'
T2	N67°18'49"E	21.46'
T3	N49°10'35"E	19.03'
T4	N30°29'41"E	0.72'
T5	N85°05'39"W	17.97'

CURVE TABLE					
NO.	RADIUS	Δ	ARC	CHORD	CHORD BEARING
C1	792.08'	02°57'18"	40.85'	40.85'	S36°28'28"W
C2	122.50'	56°57'15"	121.77'	116.82'	S66°25'44"W

POST, BUCKLEY, SCHUH & JERNIGAN, INC.
ENGINEERS, PLANNERS & SURVEYORS
6326 PRESIDENTIAL COURT
FORT MYERS, FLORIDA 33919
(941)-482-7275

PHASE P
SURVEY PLOT PLAN

BAY POINTE AT BONITA BAY, A CONDOMINIUM

MAY 1996

0 5 10 20
GRAPHIC SCALE

OR2801 PG0920

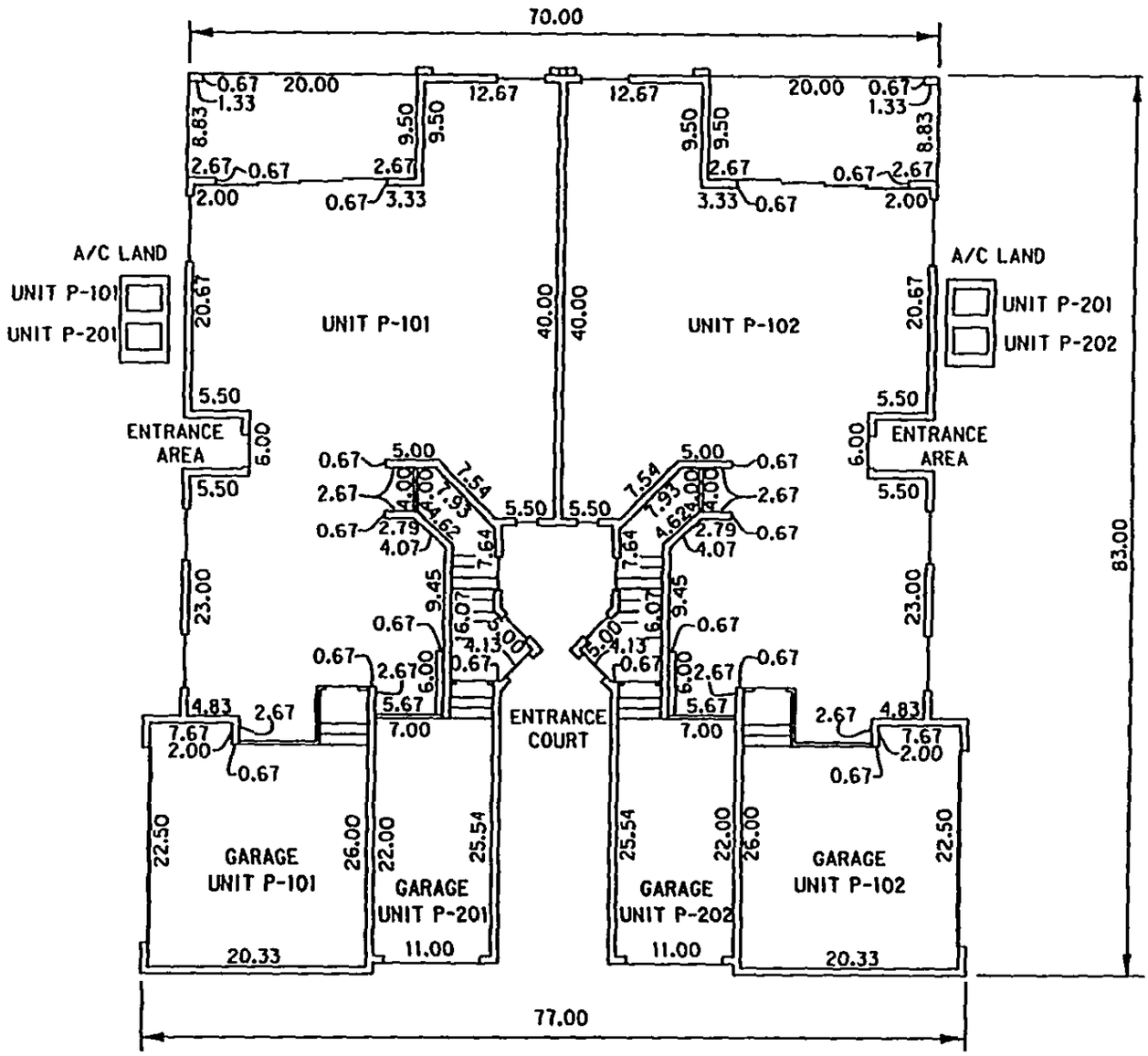

BUILDING P
FIRST FLOOR

	UNIT P-101	UNIT P-101 GARAGE	UNIT P-102	UNIT P-102 GARAGE	UNIT P-201 GARAGE	UNIT P-202 GARAGE
UPPER LIMITS:	20.25	20.25	20.25	20.25	20.25	20.25
LOWER LIMITS:	11.00	9.33	11.00	9.33	9.33	9.33

NOTES: DIMENSIONS SHOWN HEREON ARE IN FEET AND DECIMALS THEREOF.
DIMENSIONS AS SHOWN ARE SUBJECT TO NORMAL CONSTRUCTION TOLERANCES.
IMPROVEMENTS WITHIN THE CONDOMINIUM PROPERTY THAT ARE NOT UNITS OR LIMITED COMMON ELEMENTS ARE COMMON ELEMENTS

PBSJ
POST, BUCKLEY, SCHUH & JERNIGAN, INC.
ENGINEERS, PLANNERS & SURVEYORS
6326 PRESIDENTIAL COURT
FORT MYERS, FLORIDA 33919
(941)-482-7275

BAY POINTE AT BONITA BAY, A CONDOMINIUM

MAY 1996

0 5 10 20

GRAPHIC SCALE

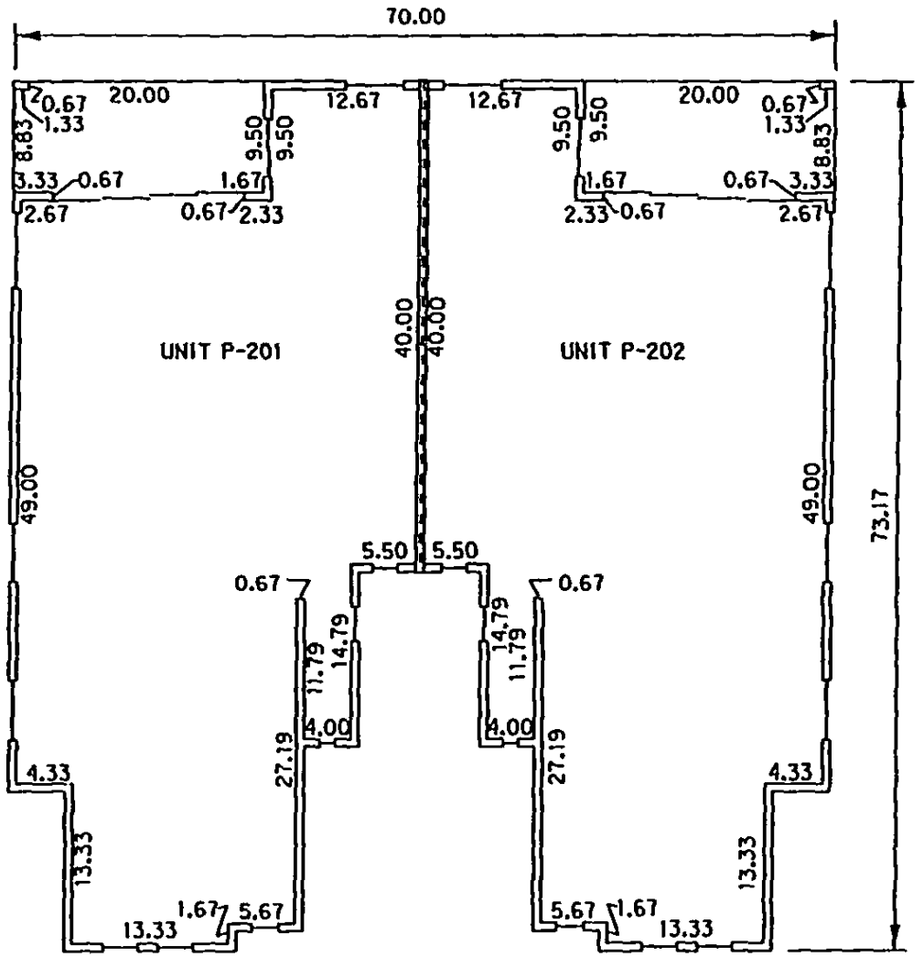

OR2801 PG0921

BUILDING P
SECOND FLOOR

	UNIT P-201	UNIT P-202
UPPER LIMITS:	31.31	31.31
LOWER LIMITS:	21.08	21.08

NOTES: DIMENSIONS SHOWN HEREON ARE IN FEET AND DECIMALS THEREOF.
DIMENSIONS AS SHOWN ARE SUBJECT TO NORMAL CONSTRUCTION TOLERANCES.
IMPROVEMENTS WITHIN THE CONDOMINIUM PROPERTY THAT ARE NOT UNITS OR LIMITED COMMON ELEMENTS ARE COMMON ELEMENTS

PBSJ
POST, BUCKLEY, SCHUH & JERNIGAN, INC.
ENGINEERS, PLANNERS & SURVEYORS
6326 PRESIDENTIAL COURT
FORT MYERS, FLORIDA 33919
(941)-482-7275

LEGAL DESCRIPTION
BAY POINTE AT BONITA BAY, A CONDOMINIUM
PHASE Q

A portion of Sections 29 and 32 , Township 47 South, Range 25 East, Lee County, Florida being more particularly described as follows:

Commence at the Northeast corner of "Bonita Bay Unit Thirty-One, Phase I", as shown in the Public Records of Lee County, Florida, in Plat Book 56, Page 9; thence N18°30'48"E a distance of 961.17 feet to the **Point of Beginning**; thence N58°50'44"W a distance of 135.23 feet; thence N30°29'41"E a distance of 20.55 feet; thence N27°26'42"E a distance of 20.87 feet; thence N36°48'42"E a distance of 44.36 feet; thence S75°52'35"E a distance of 131.69 feet to a point lying on the arc of a non-tangent circular curve concave to the northwest; thence southwesterly along the arc of said curve having for its elements, a radius of 277.50 feet, a central angle of 13°37'50", a chord distance of 65.86 feet, a chord bearing of S23°55'43"W, an arc distance of 66.02 feet to a point of compound curvature of a tangent circular curve concave to the northwest; thence southwesterly along the arc of said curve having for its elements, a radius of 792.08 feet, a central angle of 04°15'11", a chord distance of 58.78 feet, a chord bearing of S32°52'13"W, an arc distance of 58.79 feet to the **Point of Beginning.**

Containing 14243.626 square feet, more or less.

OR2801 PG0922

BAY POINTE AT BONITA BAY, A CONDOMINIUM

MAY 1996

OR2801 PG0923

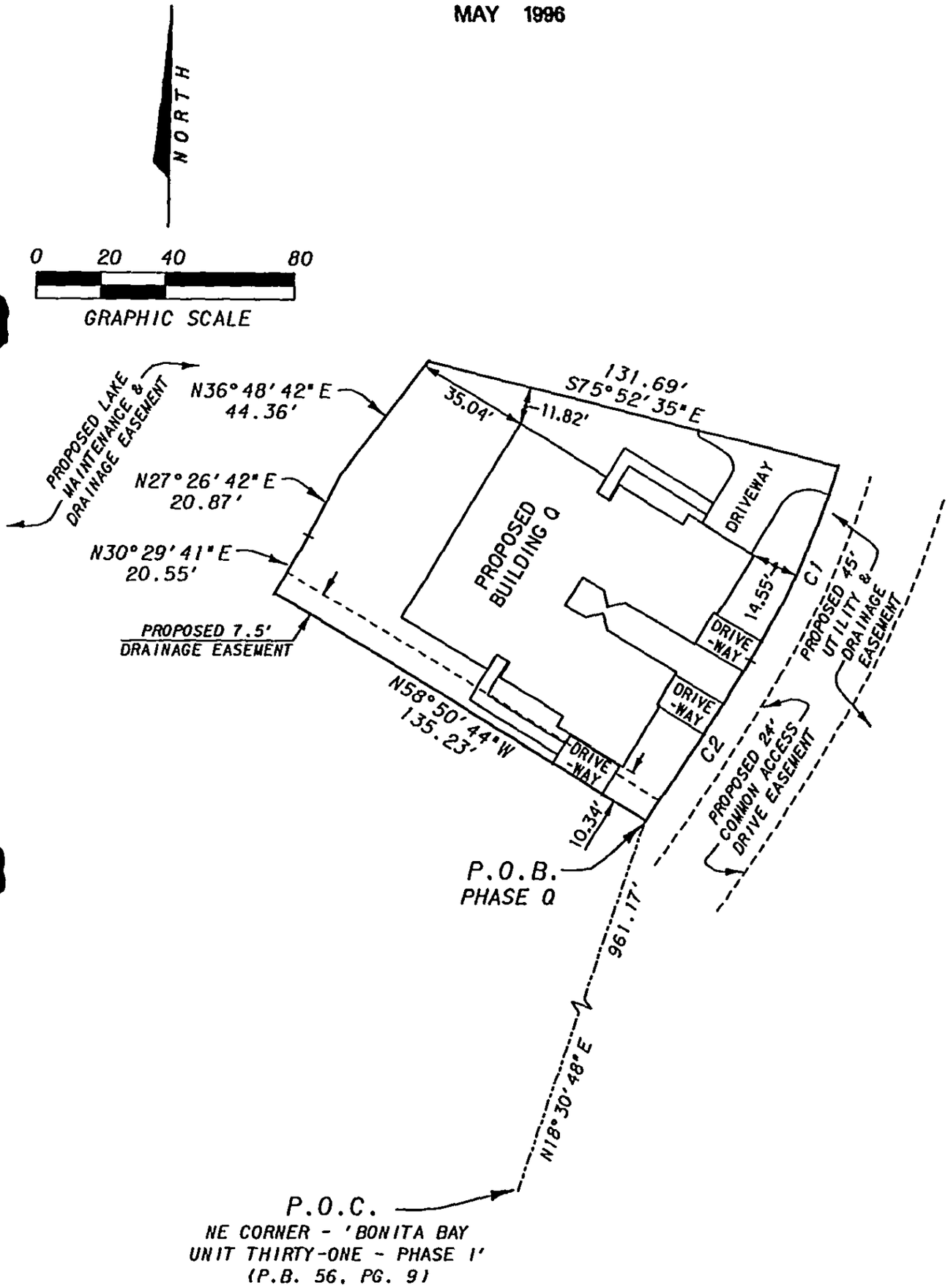

CURVE TABLE					
NO.	RADIUS	Δ	ARC	CHORD	CHORD BEARING
C1	277.50'	13°37'50"	66.02'	65.86'	S23°55'43"W
C2	792.08'	04°15'11"	58.79'	58.78'	S32°52'13"W

POST, BUCKLEY, SCHUH & JERNIGAN, INC.
ENGINEERS, PLANNERS & SURVEYORS
6326 PRESIDENTIAL COURT
FORT MYERS, FLORIDA 33919
(941)-482-7275

PHASE Q
SURVEY PLOT PLAN

BAY POINTE AT BONITA BAY, A CONDOMINIUM

MAY 1996

0 5 10 20
GRAPHIC SCALE

OR2801 PG0921

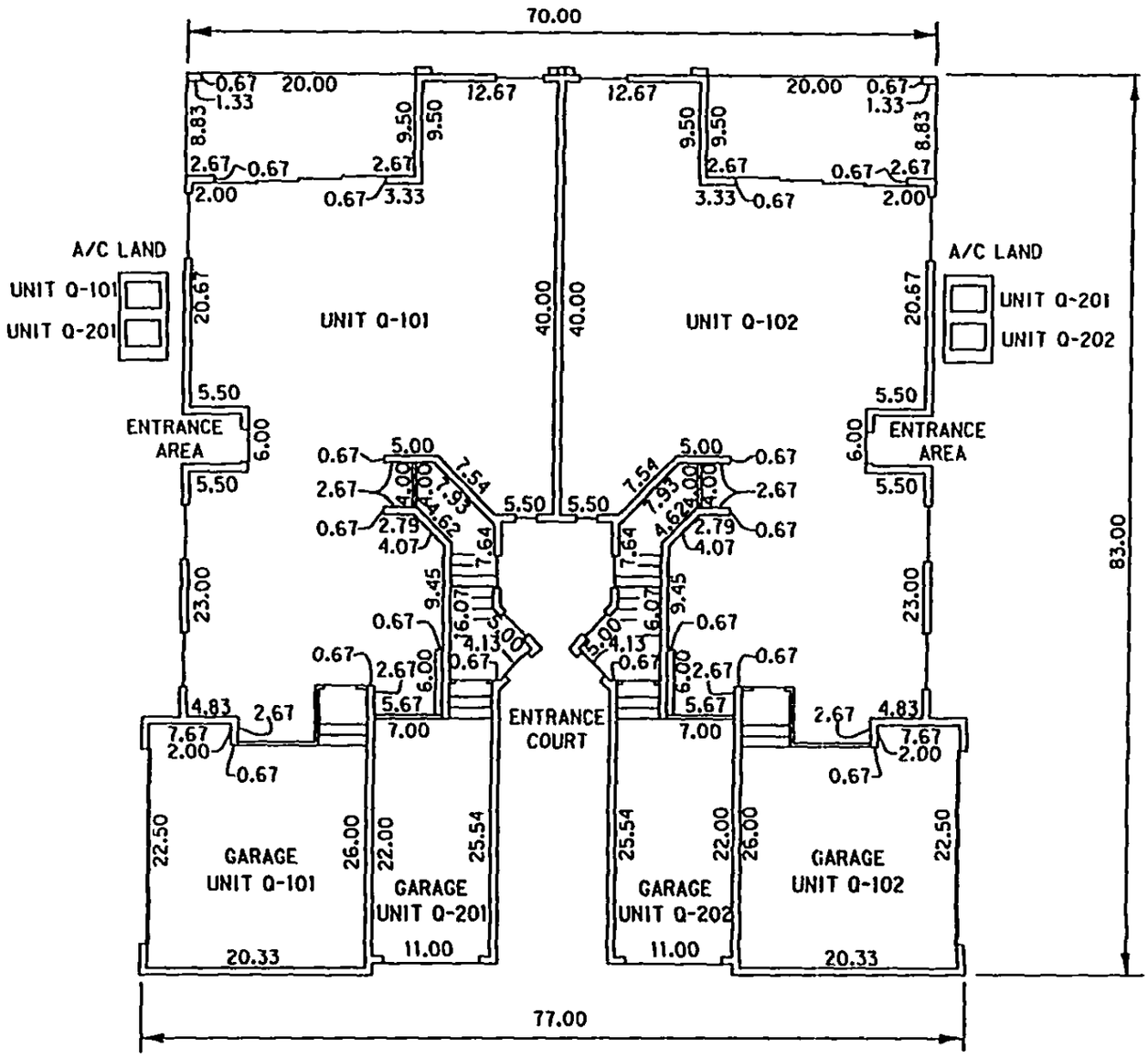

BUILDING Q
FIRST FLOOR

	UNIT Q-101	UNIT Q-101 GARAGE	UNIT Q-102	UNIT Q-102 GARAGE	UNIT Q-201 GARAGE	UNIT Q-202 GARAGE
UPPER LIMITS:	20.25	20.25	20.25	20.25	20.25	20.25
LOWER LIMITS:	11.00	9.33	11.00	9.33	9.33	9.33

NOTES: DIMENSIONS SHOWN HEREON ARE IN FEET AND DECIMALS THEREOF.
DIMENSIONS AS SHOWN ARE SUBJECT TO NORMAL CONSTRUCTION TOLERANCES.
IMPROVEMENTS WITHIN THE CONDOMINIUM PROPERTY THAT ARE NOT UNITS OR LIMITED COMMON ELEMENTS ARE COMMON ELEMENTS

PBSJ
POST, BUCKLEY, SCHUH & JERNIGAN, INC.
ENGINEERS, PLANNERS & SURVEYORS
6326 PRESIDENTIAL COURT
FORT MYERS, FLORIDA 33919
(941)-482-7275

BAY POINTE AT BONITA BAY, A CONDOMINIUM

MAY 1996

0 5 10 20
GRAPHIC SCALE

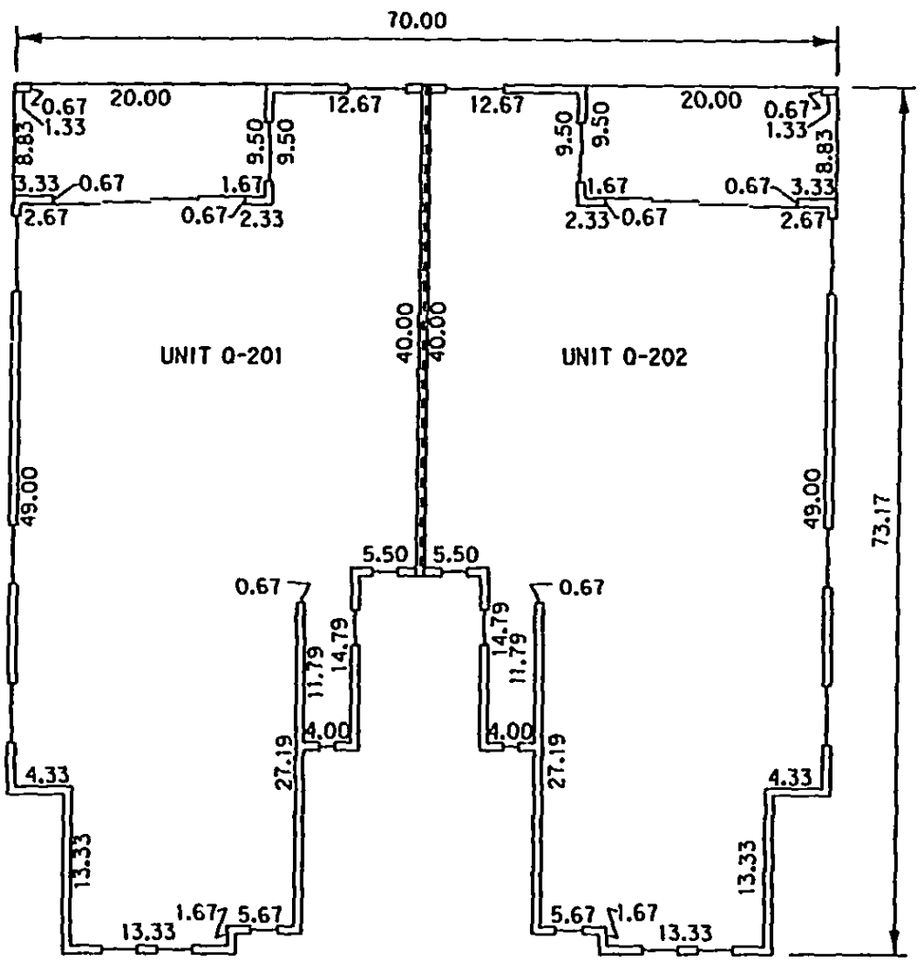

BUILDING Q
SECOND FLOOR

	UNIT Q-201	UNIT Q-202
UPPER LIMITS:	31.31	31.31
LOWER LIMITS:	21.08	21.08

NOTES: DIMENSIONS SHOWN HEREON ARE IN FEET AND DECIMALS THEREOF.
DIMENSIONS AS SHOWN ARE SUBJECT TO NORMAL CONSTRUCTION TOLERANCES.
IMPROVEMENTS WITHIN THE CONDOMINIUM PROPERTY THAT ARE NOT UNITS OR LIMITED COMMON ELEMENTS ARE COMMON ELEMENTS

PBSJ
POST, BUCKLEY, SCHUH & JERNIGAN, INC.
ENGINEERS, PLANNERS & SURVEYORS
6326 PRESIDENTIAL COURT
FORT MYERS, FLORIDA 33919
(941)-482-7275

OR2801 PG0925

LEGAL DESCRIPTION
BAY POINTE AT BONITA BAY, A CONDOMINIUM
PHASE R

A portion of Sections 29 and 32 , Township 47 South, Range 25 East, Lee County, Florida being more particularly described as follows:

Commence at the Northeast corner of "Bonita Bay Unit Thirty-One, Phase I", as shown in the Public Records of Lee County, Florida, in Plat Book 56, Page 9; thence N19°36'45"E a distance of 1083.88 feet to the **Point of Beginning**; thence N75°52'35"W a distance of 131.69 feet to a point lying on the arc of a non-tangent circular curve concave to the west; thence northerly along the arc of said curve, having for its elements, a radius of 70.00 feet, a central angle of 76°12'24", a chord distance of 86.39 feet, a chord bearing of N01°17'30"W, an arc distance of 93.10 feet; thence N85°21'33"E a distance of 117.22 feet to a point lying on the arc of a non-tangent circular curve concave to the east; thence southerly along the arc of said curve, having for its elements, a radius of 57.50 feet, a central angle of 24°28'14", a chord distance of 24.37 feet, a chord bearing of S21°21'15"E, an arc distance of 24.56 feet, to a point of reverse curvature of a tangent circular curve concave to the west; thence southerly along the arc of said curve, having for its elements, a radius of 87.50 feet, a central angle of 41°04'55", a chord distance of 61.40 feet, a chord bearing of S13°02'55"E, an arc distance of 62.74 feet, to a point of compound curvature of a tangent circular curve, having for its elements, a radius of 277.50 feet, a central angle of 09°37'15", a chord distance of 46.54 feet, a chord bearing of S12°18'10"W, an arc distance of 46.60 feet to the **Point of Beginning.**

Containing 13415.075 square feet, more or less.

OR2801 PG0926

BAY POINTE AT BONITA BAY, A CONDOMINIUM

MAY 1996

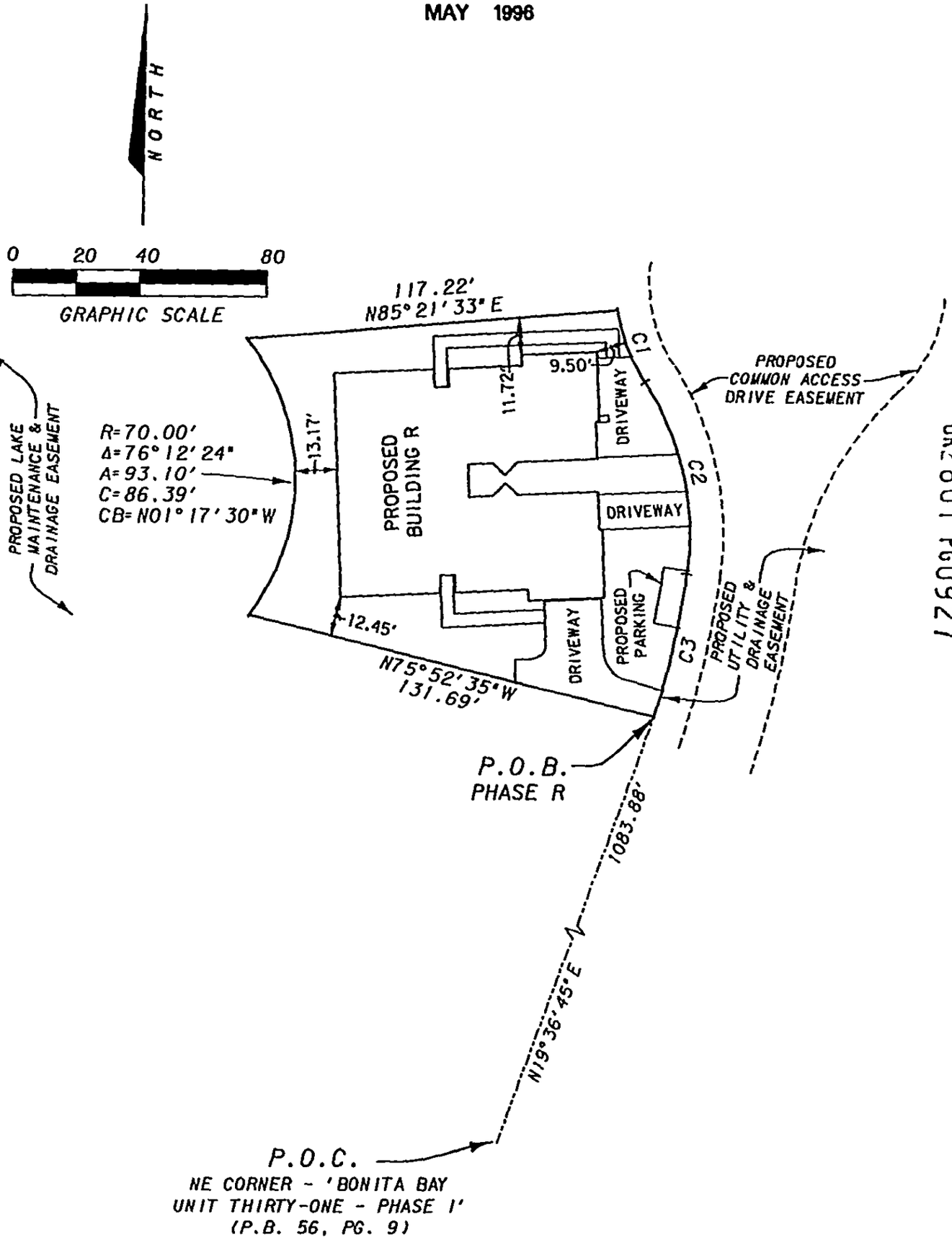

CURVE TABLE					
NO.	RADIUS	Δ	ARC	CHORD	CHORD BEARING
C1	57.50'	24°28'14"	24.56'	24.37'	S21°21'15"E
C2	87.50'	41°04'55"	62.74'	61.40'	S13°02'55"E
C3	277.50'	09°37'15"	46.60'	46.54'	S12°18'10"W

POST, BUCKLEY, SCHUH & JERNIGAN, INC.
ENGINEERS, PLANNERS & SURVEYORS
6326 PRESIDENTIAL COURT
FORT MYERS, FLORIDA 33919
(941)-482-7275

PHASE R
SURVEY PLOT PLAN

BAY POINTE AT BONITA BAY, A CONDOMINIUM

MAY 1996

0 5 10 20

GRAPHIC SCALE

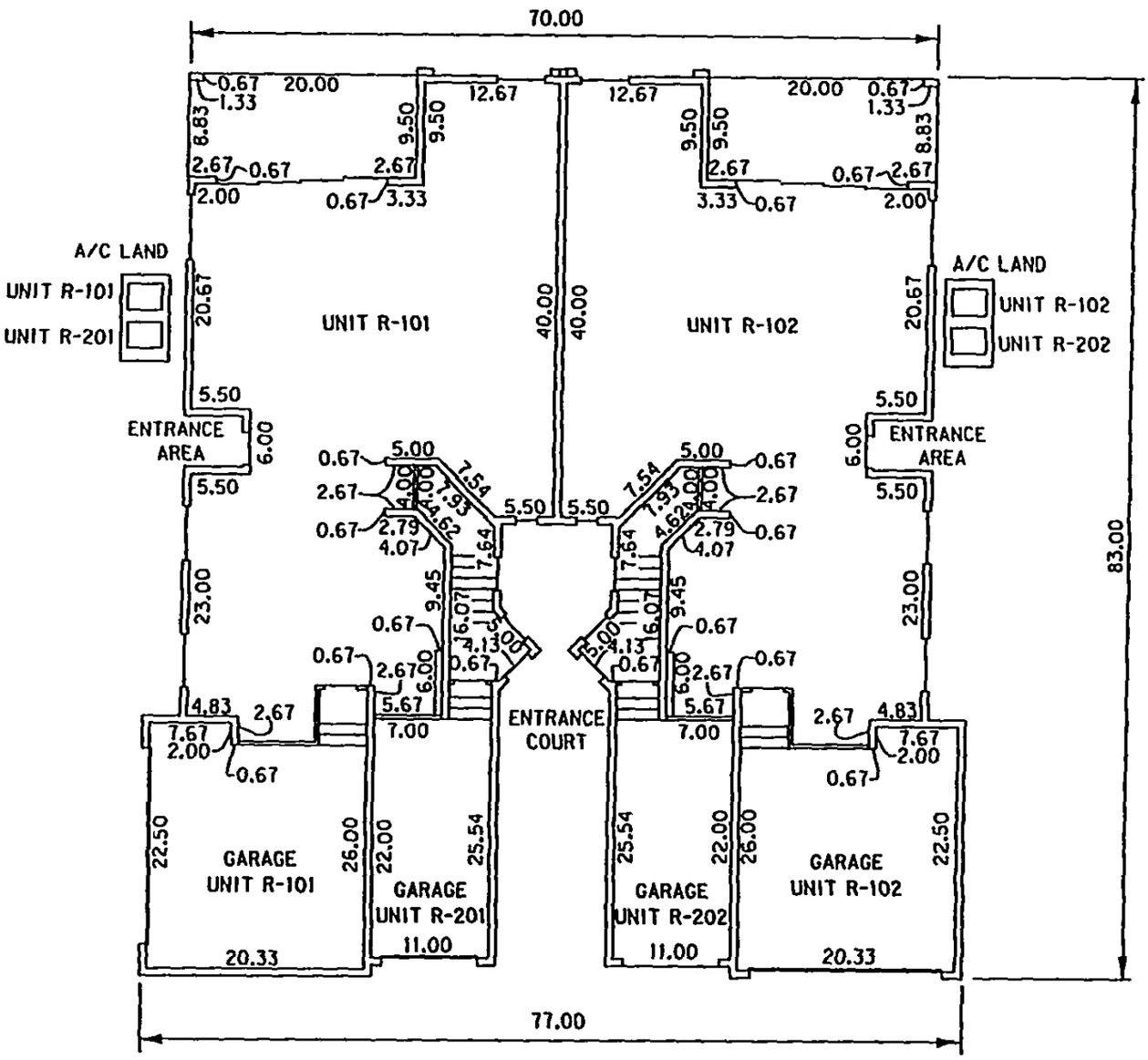

OR2801 PG0928

BUILDING R
FIRST FLOOR

	UNIT R-101	UNIT R-101 GARAGE	UNIT R-102	UNIT R-102 GARAGE	UNIT R-201 GARAGE	UNIT R-202 GARAGE
UPPER LIMITS:	20.25	20.25	20.25	20.25	20.25	20.25
LOWER LIMITS:	11.00	9.33	11.00	9.33	9.33	9.33

NOTES: DIMENSIONS SHOWN HEREON ARE IN FEET AND DECIMALS THEREOF.
DIMENSIONS AS SHOWN ARE SUBJECT TO NORMAL CONSTRUCTION TOLERANCES.
IMPROVEMENTS WITHIN THE CONDOMINIUM PROPERTY THAT ARE NOT UNITS OR LIMITED COMMON ELEMENTS ARE COMMON ELEMENTS

PBSJ
POST, BUCKLEY, SCHUH & JERNIGAN, INC.
ENGINEERS, PLANNERS & SURVEYORS
6326 PRESIDENTIAL COURT
FORT MYERS, FLORIDA 33919
(941)-482-7275

BAY POINTE AT BONITA BAY, A CONDOMINIUM

MAY 1996

0 5 10 20
GRAPHIC SCALE

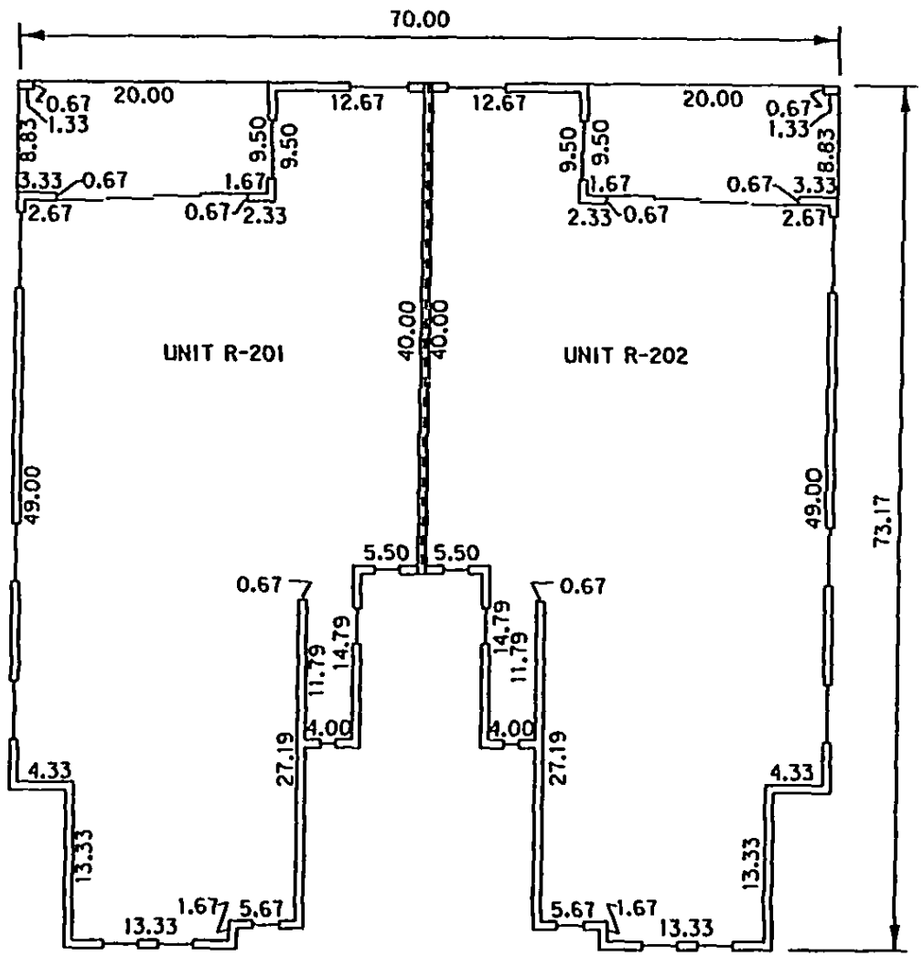

OR 2801 PG 0929

BUILDING R
SECOND FLOOR

	UNIT R-201	UNIT R-202
UPPER LIMITS:	31.31	31.31
LOWER LIMITS:	21.08	21.08

NOTES: DIMENSIONS SHOWN HEREON ARE IN FEET AND DECIMALS THEREOF.
DIMENSIONS AS SHOWN ARE SUBJECT TO NORMAL CONSTRUCTION TOLERANCES.
IMPROVEMENTS WITHIN THE CONDOMINIUM PROPERTY THAT ARE NOT UNITS OR LIMITED COMMON ELEMENTS ARE COMMON ELEMENTS

PBSJ
POST, BUCKLEY, SCHUH & JERNIGAN, INC.
ENGINEERS, PLANNERS & SURVEYORS
6326 PRESIDENTIAL COURT
FORT MYERS, FLORIDA 33919
(941)-482-7275

LEGAL DESCRIPTION
BAY POINTE AT BONITA BAY, A CONDOMINIUM
PHASE S

A portion of Sections 29 and 32 , Township 47 South, Range 25 East, Lee County, Florida being more particularly described as follows:

Commence at the Northeast corner of "Bonita Bay Unit Thirty-One, Phase I", as shown in the Public Records of Lee County, Florida, in Plat Book 56, Page 9; thence N16°59'13"E a distance of 1201.40 feet to the **Point of Beginning**; thence S85°21'33"W a distance of 117.22 feet to a point lying on the arc of a non-tangent circular curve concave to the southwest; thence northwesterly along the arc of said curve, having for its elements, a radius of 70.00 feet, a central angle of 09°59'57", a chord distance of 12.20 feet, a chord bearing of N44°23'41"W, an arc distance of 12.22 feet to a point of reverse curvature of a tangent circular curve concave to the northeast; thence northwesterly along the arc of said curve, having for its elements, a radius of 5.00 feet, a central angle of 42°40'18", a chord distance of 3.64 feet, a chord bearing of N28°03'30"W, an arc distance of 3.72 feet; thence N06°43'21"W a distance of 54.50 feet; thence N47°49'02"W a distance of 34.75 feet to a point lying on the arc of a non-tangent circular curve concave to the southeast; thence northeasterly along the arc of said curve, having for its elements, a radius of 112.25 feet, a central angle of 31°33'56", a chord distance of 61.06 feet, a chord bearing of N57°58'02"E, an arc distance of 61.84 feet to a point of compound curvature of a tangent circular curve concave to the south; thence easterly along the arc of said curve, having for its elements, a radius of 106.44 feet, a central angle of 32°15'00", a chord distance of 59.12 feet, a chord bearing of N89°52'30"E, an arc distance of 59.91 feet to a point of compound curvature of a tangent circular curve concave to the southwest; thence southeasterly along the arc of said curve, having for its elements, a radius of 79.90 feet, a central angle of 13°00'00", a chord distance of 18.09 feet, a chord bearing of S67°30'00"E, an arc distance of 18.13 feet to a point of reverse curvature of a tangent circular curve concave to the northeast; thence southeasterly along the arc of said curve, having for its elements, a radius of 322.55 feet, a central angle of 20°15'00", a chord distance of 113.41 feet, a chord bearing of S71°07'30"E, an arc distance of 114.00 feet; thence S17°34'55"W a distance of 5.13 feet to a point lying on the arc of a non-tangent circular curve concave to the southeast; thence southwesterly along the arc of said curve, having for its elements, a radius of 57.50 feet, a central angle of 116°42'03", a chord distance of 97.90 feet, a chord bearing of S49°13'54"W, an arc distance of 117.12 feet to the **Point of Beginning.**

Containing 17042.458 square feet, more or less.

OR 801 PG0930

BAY POINTE AT BONITA BAY, A CONDOMINIUM

MAY 1996

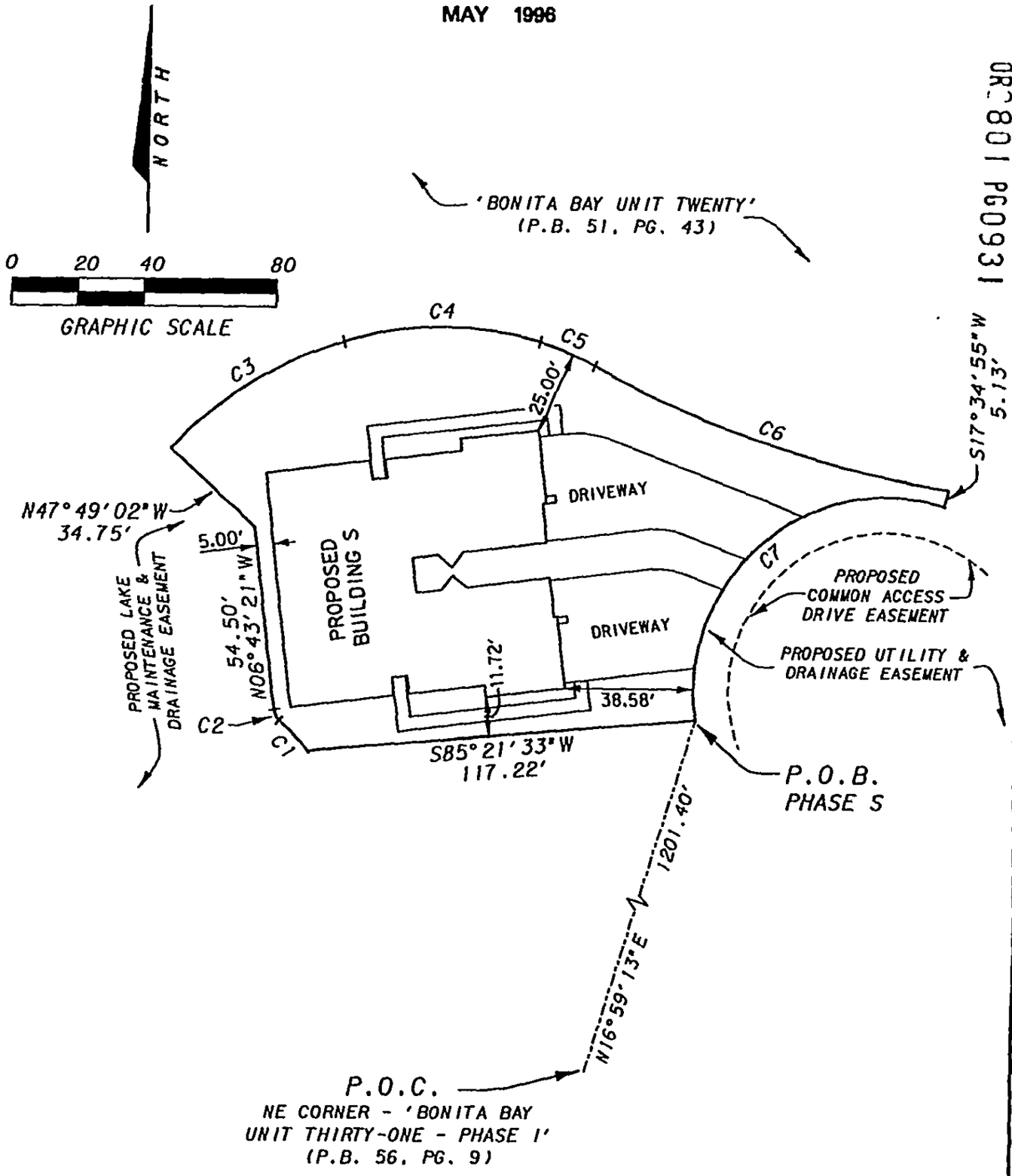

ORB 801 PG0931

CURVE TABLE					
NO.	RADIUS	Δ	ARC	CHORD	CHORD BEARING
C1	70.00'	09°59'57"	12.22'	12.20'	N44°23'41"W
C2	5.00'	42°40'18"	3.72'	3.64'	N28°03'30"W
C3	112.25'	31°33'56"	61.84'	61.06'	N57°58'02"E
C4	106.44'	32°15'00"	59.91'	59.12'	N89°52'30"E
C5	79.90'	13°00'00"	18.13'	18.09'	S67°30'00"E
C6	322.55'	20°15'00"	114.00'	113.41'	S71°07'30"E
C7	57.50'	116°42'03"	117.12'	97.90'	S49°13'54"W

PBSJ
POST, BUCKLEY, SCHUH & JERNIGAN, INC.
ENGINEERS, PLANNERS & SURVEYORS
6326 PRESIDENTIAL COURT
FORT MYERS, FLORIDA 33919
(941)-482-7275

PHASE S
SURVEY PLOT PLAN

BAY POINTE AT BONITA BAY, A CONDOMINIUM

MAY 1996

0 5 10 20
GRAPHIC SCALE

OR 1801 PG 0932

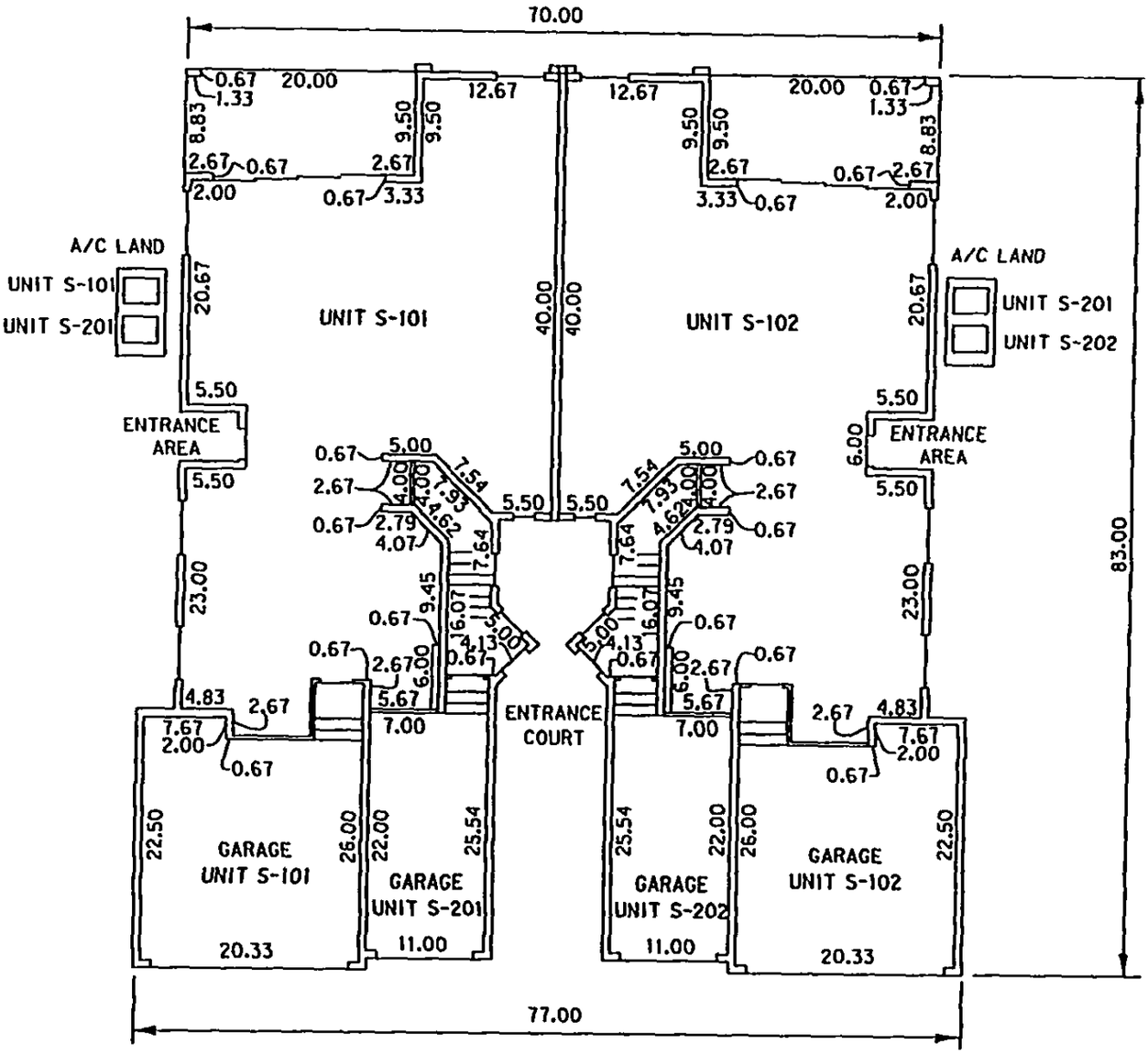

BUILDING S
FIRST FLOOR

	UNIT S-101	UNIT S-101 GARAGE	UNIT S-102	UNIT S-102 GARAGE	UNIT S-201 GARAGE	UNIT S-202 GARAGE
UPPER LIMITS:	20.25	20.25	20.25	20.25	20.25	20.25
LOWER LIMITS:	11.00	9.33	11.00	9.33	9.33	9.33

NOTES: DIMENSIONS SHOWN HEREON ARE IN FEET AND DECIMALS THEREOF.
DIMENSIONS AS SHOWN ARE SUBJECT TO NORMAL CONSTRUCTION TOLERANCES.
IMPROVEMENTS WITHIN THE CONDOMINIUM PROPERTY THAT ARE NOT UNITS OR LIMITED COMMON ELEMENTS ARE COMMON ELEMENTS

PBS&J
POST, BUCKLEY, SCHUH & JERNIGAN, INC.
ENGINEERS, PLANNERS & SURVEYORS
6326 PRESIDENTIAL COURT
FORT MYERS, FLORIDA 33919
(941)-482-7275

BAY POINTE AT BONITA BAY, A CONDOMINIUM

MAY 1996

0 5 10 20
GRAPHIC SCALE

OR2801 PG0933

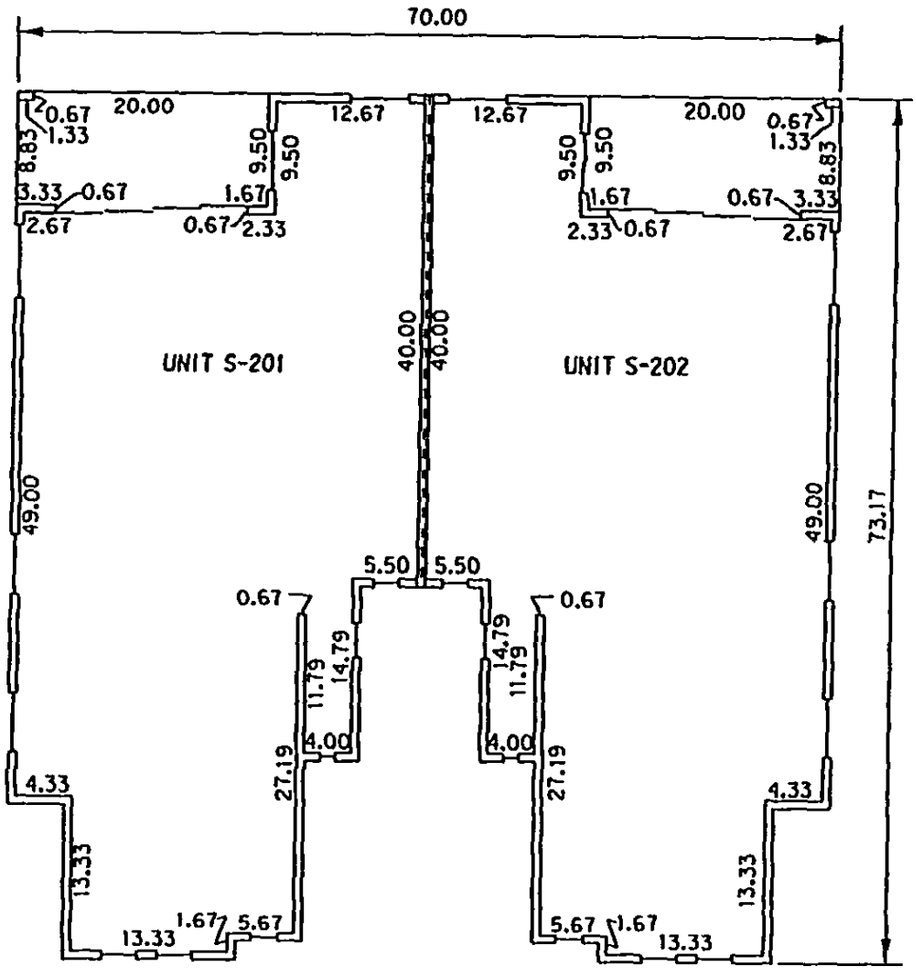

BUILDING S
SECOND FLOOR

	UNIT S-201	UNIT S-202
UPPER LIMITS:	31.31	31.31
LOWER LIMITS:	21.08	21.08

NOTES: DIMENSIONS SHOWN HEREON ARE IN FEET AND DECIMALS THEREOF.
DIMENSIONS AS SHOWN ARE SUBJECT TO NORMAL CONSTRUCTION TOLERANCES.
IMPROVEMENTS WITHIN THE CONDOMINIUM PROPERTY THAT ARE NOT UNITS OR LIMITED COMMON ELEMENTS ARE COMMON ELEMENTS

PBSJ
POST, BUCKLEY, SCHUH & JERNIGAN, INC.
ENGINEERS, PLANNERS & SURVEYORS
6326 PRESIDENTIAL COURT
FORT MYERS, FLORIDA 33919
(941)-482-7275

PHASE S
SHEET 4 OF 4

LEGAL DESCRIPTION
BAY POINTE AT BONITA BAY, A CONDOMINIUM
PHASE T

A portion of Sections 29 and 32 , Township 47 South, Range 25 East, Lee County, Florida being more particularly described as follows:

Commence at the Northeast corner of "Bonita Bay Unit Thirty-One, Phase I", as shown in the Public Records of Lee County, Florida, in Plat Book 56, Page 9; thence N15°10'32"E a distance of 662.48 feet to the **Point of Beginning**; thence N61°29'57"W a distance of 73.25 feet; thence N85°05'38"W a distance of 71.33 feet; thence N71°34'47"W a distance of 10.31 feet; thence N38°50'14"W a distance of 24.00 feet; thence N15°18'16"W a distance of 42.19 feet; thence N65°12'26"W a distance of 5.49 feet; thence N04°54'18"E a distance of 56.29 feet; thence N04°54'18"E a distance of 56.29 feet; thence S85°05'39"E a distance of 168.77 feet to a point of curvature of a tangent circular curve concave to the north; thence easterly along the arc of said curve, having for its elements, a radius of 167.50 feet, a cental angle of 08°53'08", a chord distance of 25.95 feet, a chord bearing of S89°32'13"E, an arc distance of 25.98 feet; thence S04°54'22"W a distance of 127.05 feet to a point lying on the arc of a non-tangent circular curve concave to the southeast; thence southwesterly along the arc of said curve, having for its elements, a radius of 980.58 feet, a central angle of 01°23'46", a chord distance of 23.89 feet, a chord bearing of S29°11'57"W, an arc distance of 23.89 feet to the **Point of Beginning**.

Containing 22967.529 square feet, more or less.

OR 3801 PG 0934

BAY POINTE AT BONITA BAY, A CONDOMINIUM

MAY 1996

CURVE TABLE					
NO.	RADIUS	Δ	ARC	CHORD	CHORD BEARING
C1	167.50'	08°53'08"	25.98'	25.95'	S89°32'13"E
C2	980.58'	01°23'46"	23.89'	23.89'	S29°11'57"W

NORTH

0 20 40 80

GRAPHIC SCALE

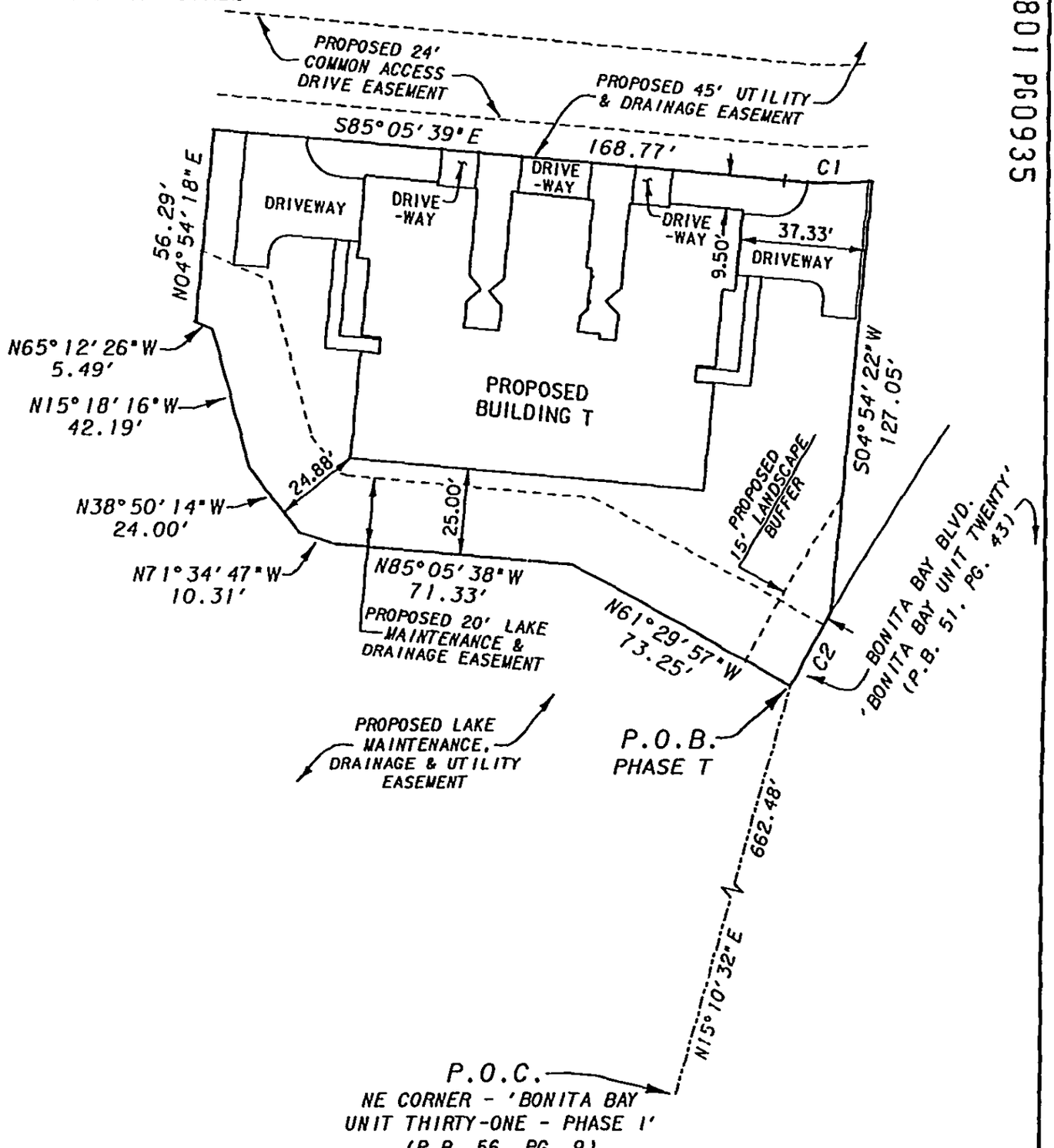

OR2801 PG0935

POST, BUCKLEY, SCHUH & JERNIGAN, INC.
ENGINEERS, PLANNERS & SURVEYORS
6326 PRESIDENTIAL COURT
FORT MYERS, FLORIDA 33919
(941)-482-7275

PHASE T
SURVEY PLOT PLAN

BAY POINTE AT BONITA BAY, A CONDOMINIUM

MAY 1996

OR2801 PG0936

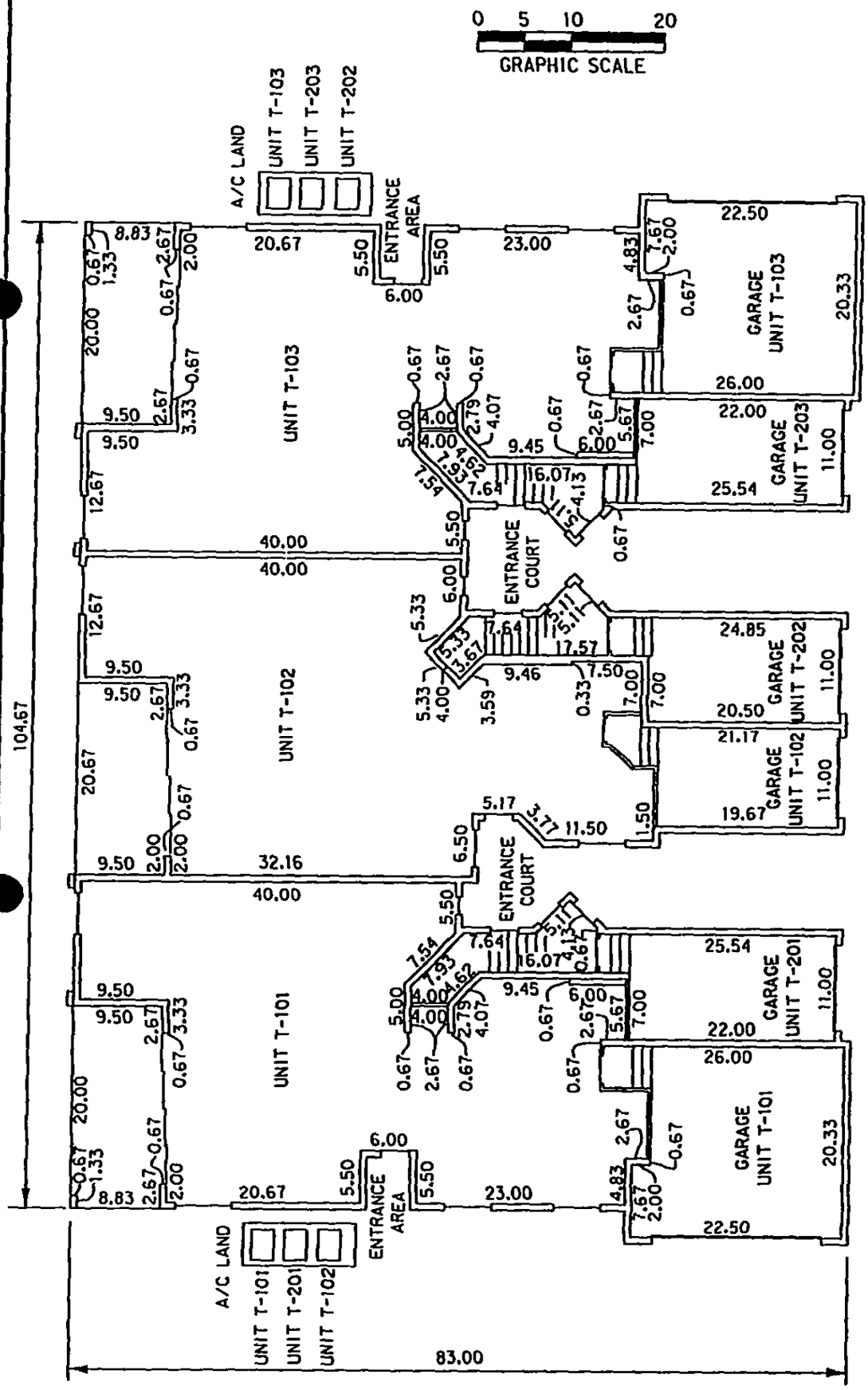

BUILDING T
FIRST FLOOR

	UNIT T-101	UNIT T-101 GARAGE	UNIT T-102	UNIT T-102 GARAGE	UNIT T-103	UNIT T-103 GARAGE	UNIT T-201 GARAGE	UNIT T-202 GARAGE	UNIT T-203 GARAGE
UPPER LIMITS:	20.25	20.25	20.25	20.25	20.25	20.25	20.25	20.25	20.25
LOWER LIMITS:	11.00	9.33	11.00	9.33	11.00	9.33	9.33	9.33	9.33

NOTES: DIMENSIONS SHOWN HEREON ARE IN FEET AND DECIMALS THEREOF.
DIMENSIONS AS SHOWN ARE SUBJECT TO NORMAL CONSTRUCTION TOLERANCES.
IMPROVEMENTS WITHIN THE CONDOMINIUM PROPERTY THAT ARE NOT UNITS OR LIMITED COMMON ELEMENTS ARE COMMON ELEMENTS

PBSJ
POST, BUCKLEY, SCHUH & JERNIGAN, INC.
ENGINEERS, PLANNERS & SURVEYORS
6326 PRESIDENTIAL COURT
FORT MYERS, FLORIDA 33919
(941)-482-7275

BAY POINTE AT BONITA BAY, A CONDOMINIUM

MAY 1996

0 5 10 20
GRAPHIC SCALE

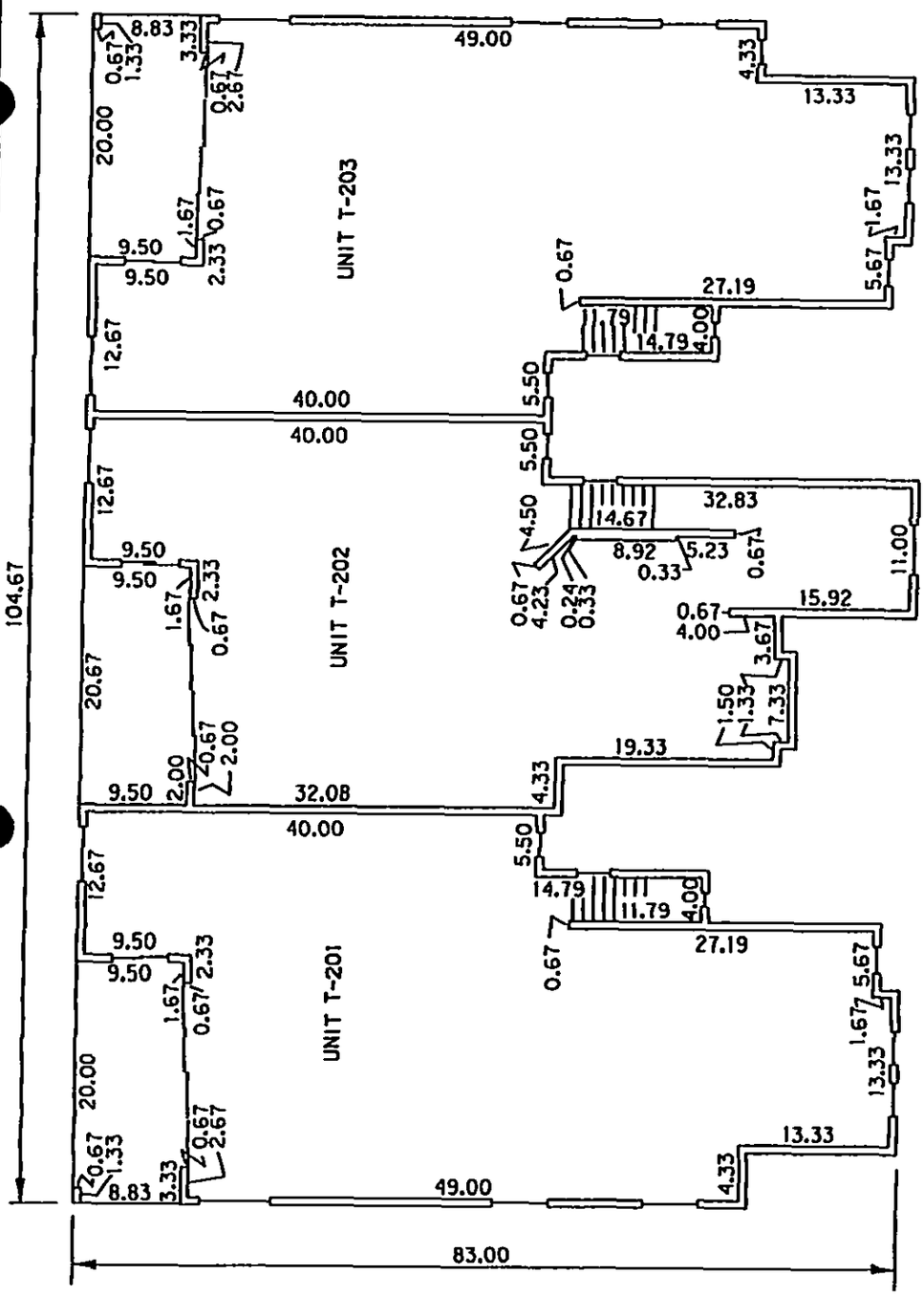

BUILDING T
SECOND FLOOR

	UNIT T-201	UNIT T-202	UNIT T-203
UPPER LIMITS:	31.31	31.31	31.31
LOWER LIMITS:	21.08	21.08	21.08

OR 2801 PG 0937

NOTES: DIMENSIONS SHOWN HEREON ARE IN FEET AND DECIMALS THEREOF.
DIMENSIONS AS SHOWN ARE SUBJECT TO NORMAL CONSTRUCTION TOLERANCES.
IMPROVEMENTS WITHIN THE CONDOMINIUM PROPERTY THAT ARE NOT UNITS OR LIMITED COMMON ELEMENTS ARE COMMON ELEMENTS

PBSJ
POST, BUCKLEY, SCHUH & JERNIGAN, INC.
ENGINEERS, PLANNERS & SURVEYORS
6326 PRESIDENTIAL COURT
FORT MYERS, FLORIDA 33919
(941)-482-7275

LEGAL DESCRIPTION
BAY POINTE AT BONITA BAY, A CONDOMINIUM
PHASE U

A portion of Sections 29 and 32 , Township 47 South, Range 25 East, Lee County, Florida being more particularly described as follows:

Commence at the Northeast corner of "Bonita Bay Unit Thirty-One, Phase I", as shown in the Public Records of Lee County, Florida, in Plat Book 56, Page 9; thence N00°13'42"W a distance of 745.39 feet to the **Point of Beginning**; thence N65°12'26"W a distance of 7.15 feet; thence N84°57'22"W a distance of 16.30 feet; thence S70°58'24"W a distance of 12.70 feet; thence S21°08'08"W a distance of 49.69 feet; thence S44°27'37"W a distance of 17.72 feet; thence S80°50'19"W a distance of 86.57 feet; thence N02°35'13"W a distance of 134.83 feet to a point lying on the arc of a non-tangent circular curve concave to the south; thence easterly along the arc of said curve, having for its elements, a radius of 727.50 feet, a cental angle of 08°20"56", a chord distance of 105.91 feet, a chord bearing of S89°16'07"E, an arc distance of 106.01 feet; thence S85°05'39"E a distance of 55.72 feet; thence S04°54'18"W a distance of 56.29 feet to the **Point of Beginning.**

Containing 16362.251 square feet, more or less.

OR2801 PG0938

BAY POINTE AT BONITA BAY, A CONDOMINIUM

MAY 1996

OR2801 PG0939

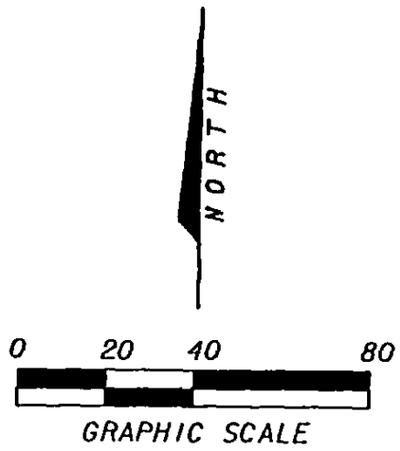

TANGENT TABLE		
NO.	BEARING	DISTANCE
T1	N65°12'26"W	7.15'
T2	N84°57'22"W	16.30'
T3	S70°58'24"W	12.70'
T4	S85°05'39"E	55.72'

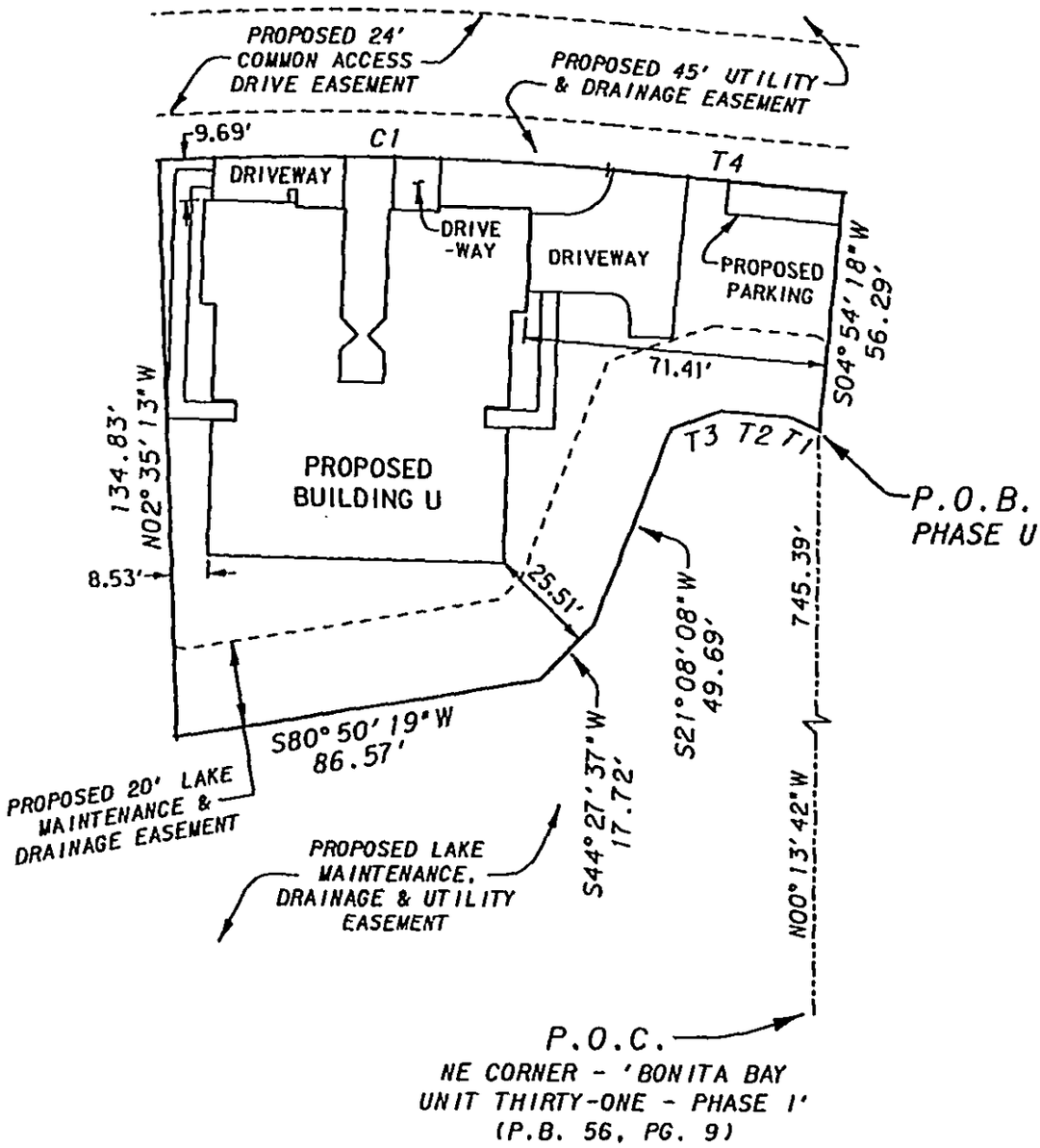

CURVE TABLE					
NO.	RADIUS	Δ	ARC	CHORD	CHORD BEARING
C1	727.50'	08°20'56"	106.01'	105.91'	S89°16'07"E

POST, BUCKLEY, SCHUH & JERNIGAN, INC.
ENGINEERS, PLANNERS & SURVEYORS
6326 PRESIDENTIAL COURT
FORT MYERS, FLORIDA 33919
(941)-482-7275

PHASE U
SURVEY PLOT PLAN

BAY POINTE AT BONITA BAY, A CONDOMINIUM

MAY 1996

0 5 10 20
GRAPHIC SCALE

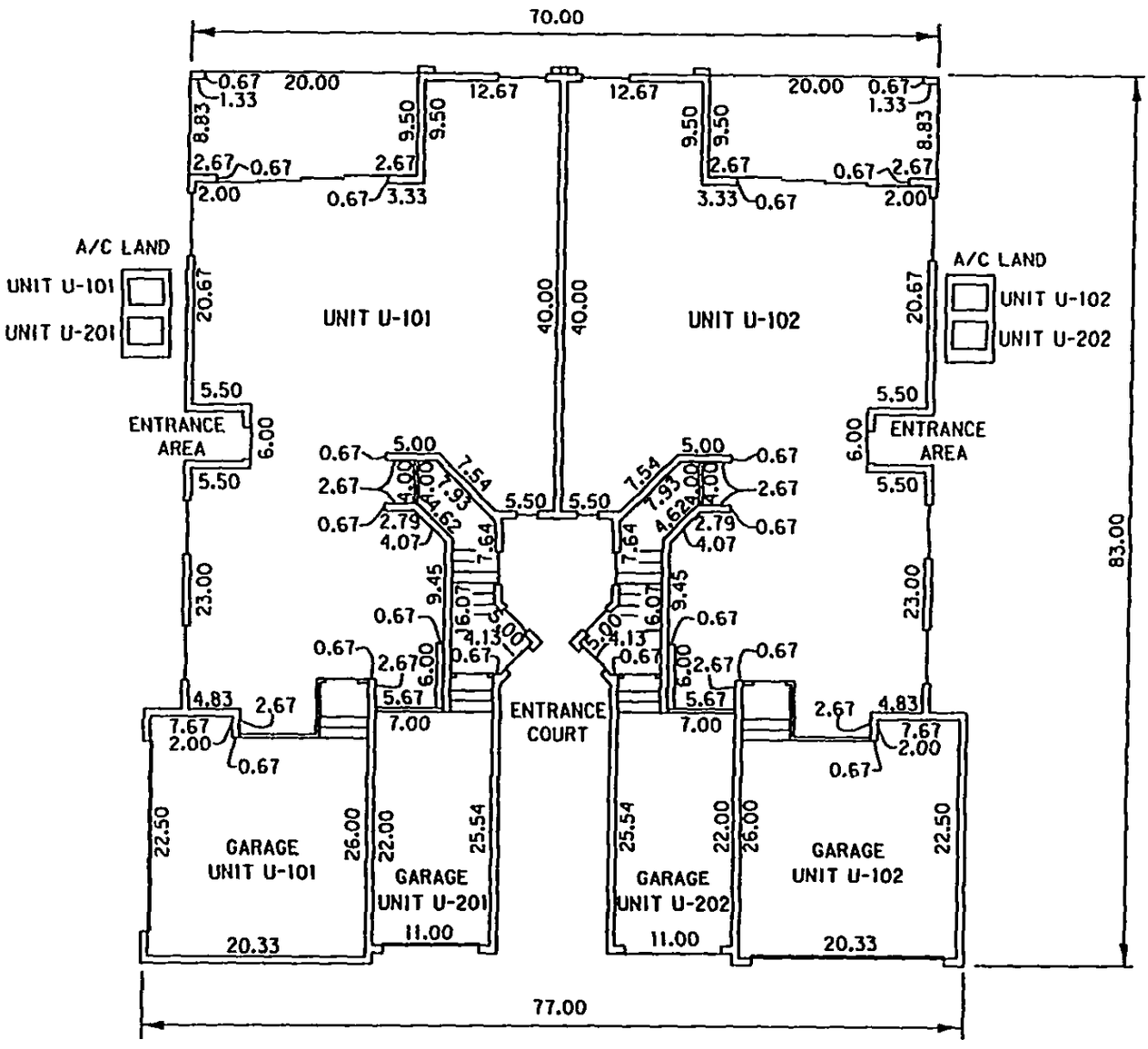

OR2801 PG0940

BUILDING U
FIRST FLOOR

	UNIT U-101	UNIT U-101 GARAGE	UNIT U-102	UNIT U-102 GARAGE	UNIT U-201 GARAGE	UNIT U-202 GARAGE
UPPER LIMITS:	20.25	20.25	20.25	20.25	20.25	20.25
LOWER LIMITS:	11.00	9.33	11.00	9.33	9.33	9.33

NOTES: DIMENSIONS SHOWN HEREON ARE IN FEET AND DECIMALS THEREOF.
DIMENSIONS AS SHOWN ARE SUBJECT TO NORMAL CONSTRUCTION TOLERANCES.
IMPROVEMENTS WITHIN THE CONDOMINIUM PROPERTY THAT ARE NOT UNITS OR LIMITED COMMON ELEMENTS ARE COMMON ELEMENTS

PBSJ
POST, BUCKLEY, SCHUH & JERNIGAN, INC.
ENGINEERS, PLANNERS & SURVEYORS
6326 PRESIDENTIAL COURT
FORT MYERS, FLORIDA 33919
(941)-482-7275

BAY POINTE AT BONITA BAY, A CONDOMINIUM

MAY 1996

0 5 10 20
GRAPHIC SCALE

OR2801 PG0941

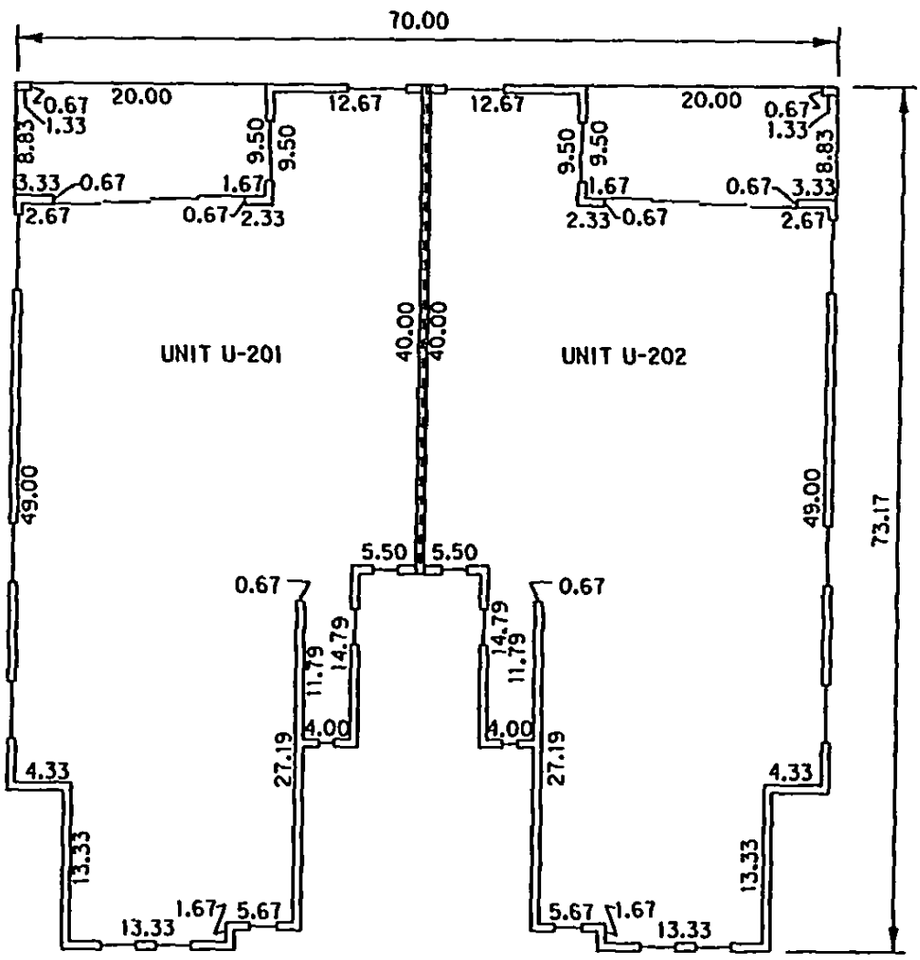

BUILDING U
SECOND FLOOR

	UNIT U-201	UNIT U-202
UPPER LIMITS:	31.31	31.31
LOWER LIMITS:	21.08	21.08

NOTES: DIMENSIONS SHOWN HEREON ARE IN FEET AND DECIMALS THEREOF.
DIMENSIONS AS SHOWN ARE SUBJECT TO NORMAL CONSTRUCTION TOLERANCES.
IMPROVEMENTS WITHIN THE CONDOMINIUM PROPERTY THAT ARE NOT UNITS OR LIMITED COMMON ELEMENTS ARE COMMON ELEMENTS

PBSJ
POST, BUCKLEY, SCHUH & JERNIGAN, INC.
ENGINEERS, PLANNERS & SURVEYORS
6326 PRESIDENTIAL COURT
FORT MYERS, FLORIDA 33919
(941)-482-7275

LEGAL DESCRIPTION
BAY POINTE AT BONITA BAY, A CONDOMINIUM
PHASE V

A portion of Sections 29 and 32 , Township 47 South, Range 25 East, Lee County, Florida being more particularly described as follows:

Commence at the Northeast corner of "Bonita Bay Unit Thirty-One, Phase I", as shown in the Public Records of Lee County, Florida, in Plat Book 56, Page 9; thence N12°51'01"W a distance of 690.18 feet to the **Point of Beginning**; thence N73°28'13"W a distance of 46.04 feet; thence S85°04'48"W a distance of 44.78 feet; thence S03°01'36"E a distance of 35.50 feet; thence N44°11'54"W a distance of 178.62 feet to a point lying on the arc of a non-tangent circular curve concave to the southeast; thence northeasterly along the arc of said curve, having for its elements, a radius of 102.50 feet, a central angle of 31°44'56", a chord distance of 56.07 feet, a chord bearing of N69°12'20"E; an arc distance of 56.80 feet; thence N85°04'48"E a distance of 134.69 feet to a point of curvature of a tangent circular curve concave to the south; thence easterly along the arc of said curve, having for its elements, a radius of 727.50 feet, a central angle of 01°28'37", a chord distance of 18.75 feet, a chord bearing of N85°49'07"E, an arc distance of 18.75 feet; thence S02°35'13"E a distance of 134.83 feet to the **Point of Beginning**.

Containing 20525.355 square feet, more or less.

ORB 801 PG0942

BAY POINTE AT BONITA BAY, A CONDOMINIUM

MAY 1996

OR2801 PG0943

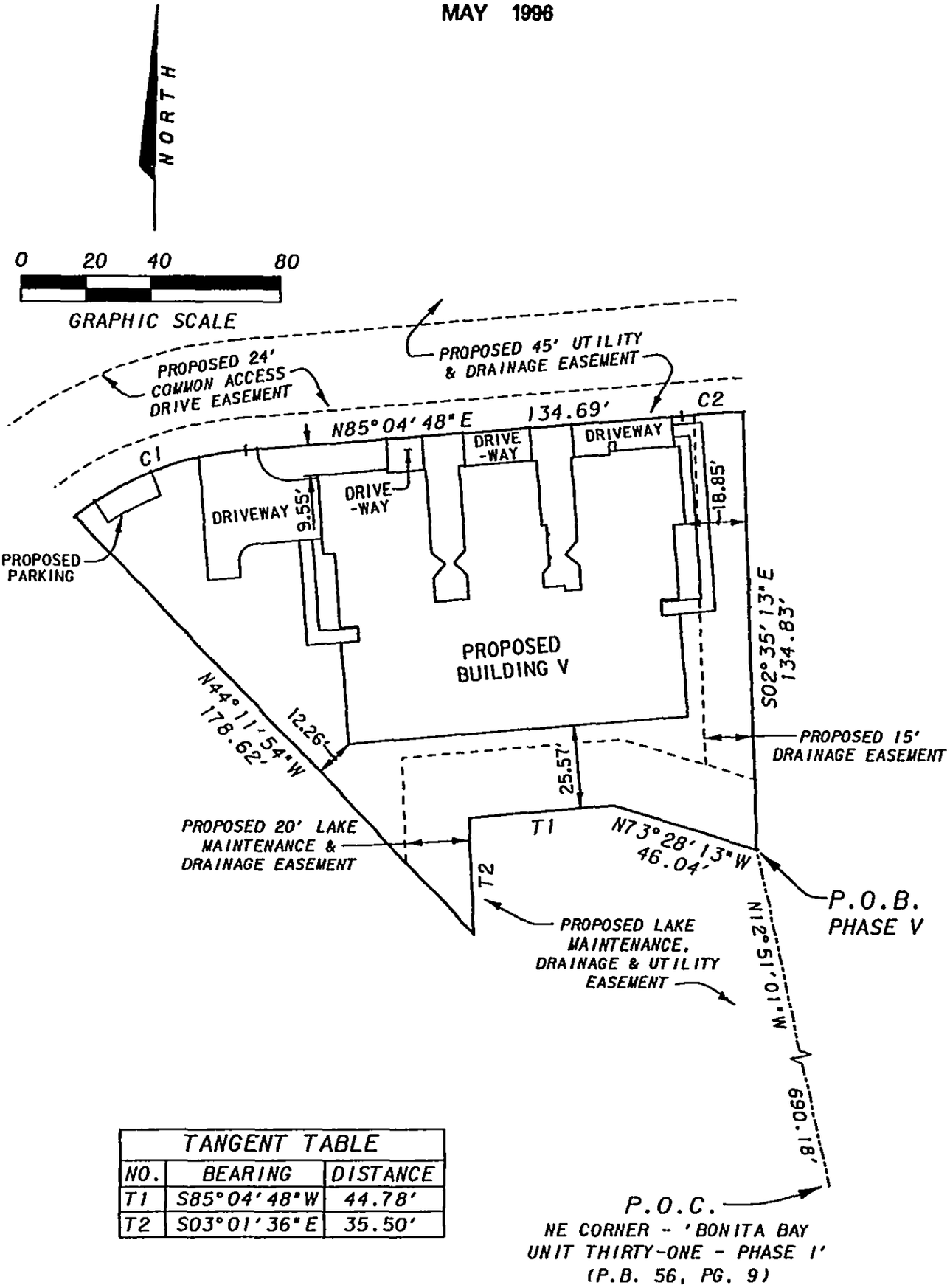

TANGENT TABLE		
NO.	BEARING	DISTANCE
T1	S85°04'48"W	44.78'
T2	S03°01'36"E	35.50'

CURVE TABLE					
NO.	RADIUS	Δ	ARC	CHORD	CHORD BEARING
C1	102.50'	31°44'56"	56.80'	56.07'	N69°12'20"E
C2	727.50'	01°28'37"	18.75'	18.75'	N85°49'07"E

POST, BUCKLEY, SCHUH & JERNIGAN, INC.
ENGINEERS, PLANNERS & SURVEYORS
6326 PRESIDENTIAL COURT
FORT MYERS, FLORIDA 33919
(941)-482-7275

PHASE V
SURVEY PLOT PLAN

BAY POINTE AT BONITA BAY, A CONDOMINIUM

MAY 1996

OR 801 PG 0944

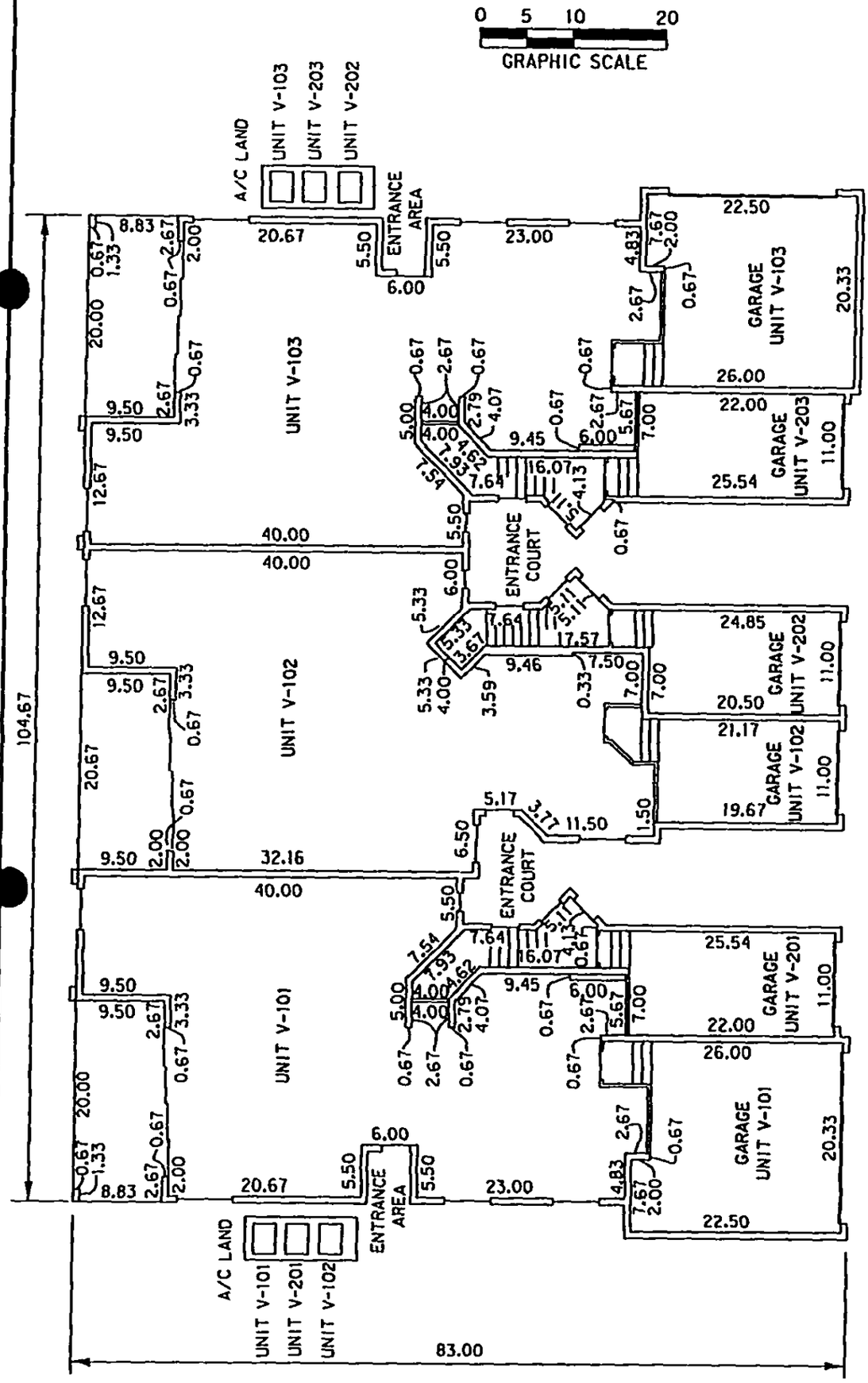

BUILDING V
FIRST FLOOR

	UNIT V-101	UNIT V-101 GARAGE	UNIT V-102	UNIT V-102 GARAGE	UNIT V-103	UNIT V-103 GARAGE	UNIT V-201 GARAGE	UNIT V-202 GARAGE	UNIT V-203 GARAGE
UPPER LIMITS:	20.25	20.25	20.25	20.25	20.25	20.25	20.25	20.25	20.25
LOWER LIMITS:	11.00	9.33	11.00	9.33	11.00	9.33	9.33	9.33	9.33

NOTES: DIMENSIONS SHOWN HEREON ARE IN FEET AND DECIMALS THEREOF.
DIMENSIONS AS SHOWN ARE SUBJECT TO NORMAL CONSTRUCTION TOLERANCES.
IMPROVEMENTS WITHIN THE CONDOMINIUM PROPERTY THAT ARE NOT UNITS OR LIMITED COMMON ELEMENTS ARE COMMON ELEMENTS

PBSJ
POST, BUCKLEY, SCHUH & JERNIGAN, INC.
ENGINEERS, PLANNERS & SURVEYORS
6326 PRESIDENTIAL COURT
FORT MYERS, FLORIDA 33919
(941)-482-7275

BAY POINTE AT BONITA BAY, A CONDOMINIUM

MAY 1998

0 5 10 20
GRAPHIC SCALE

OR 2801 PG 0945

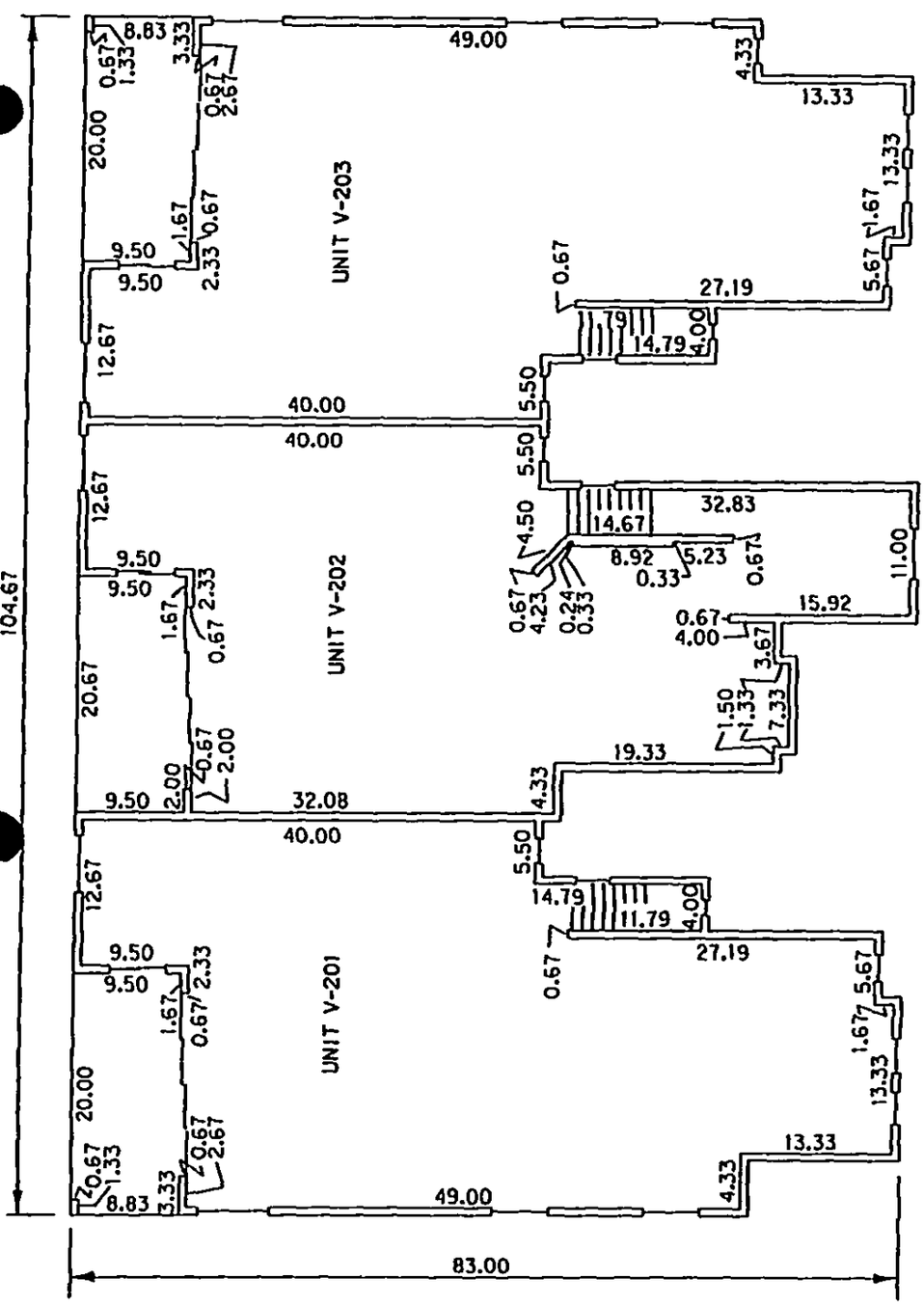

BUILDING V
SECOND FLOOR

	UNIT V-201	UNIT V-202	UNIT V-203
UPPER LIMITS:	31.31	31.31	31.31
LOWER LIMITS:	21.08	21.08	21.08

NOTES: DIMENSIONS SHOWN HEREON ARE IN FEET AND DECIMALS THEREOF.
DIMENSIONS AS SHOWN ARE SUBJECT TO NORMAL CONSTRUCTION TOLERANCES.
IMPROVEMENTS WITHIN THE CONDOMINIUM PROPERTY THAT ARE NOT UNITS OR LIMITED COMMON ELEMENTS ARE COMMON ELEMENTS

PBSJ
POST, BUCKLEY, SCHUH & JERNIGAN, INC.
ENGINEERS, PLANNERS & SURVEYORS
6326 PRESIDENTIAL COURT
FORT MYERS, FLORIDA 33919
(941)-482-7275

PHASE V
SHEET 4 OF 4

LEGAL DESCRIPTION
BAY POINTE AT BONITA BAY, A CONDOMINIUM
PHASE W

A portion of Sections 29 and 32 , Township 47 South, Range 25 East, Lee County, Florida being more particularly described as follows:

Commence at the Northeast corner of "Bonita Bay Unit Thirty-One, Phase I", as shown in the Public Records of Lee County, Florida, in Plat Book 56, Page 9; thence N34°37'03"W a distance of 710.70 feet to the **Point of Beginning**, said point lying on the arc of non-tangent circular curve concave to the east; thence northerly along the arc of said curve, having for its elements, a radius of 177.50 feet, a central angle of 08°57'48", a chord distance of 27.74 feet, a chord bearing of N04°37'32"W, an arc distance of 27.77 feet; thence N00°08'38"W a distance of 79.75 feet to a point of curvature of a tangent circular curve concave to the southeast; thence northeasterly along the arc of said curve, having for its elements, a radius of 102.50 feet, a central angle of 53°28'30", a chord distance of 92.23 feet, a chord bearing of N26°35'37"E, an arc distance of 95.66 feet; thence S44°11'54"E a distance of 178.62 feet; thence S03°01'36"E a distance of 20.86 feet; thence S76°00'32"W a distance of 169.50 feet to the **Point of Beginning.**

Containing 19140.634 feet, more or less.

OR2801 PG0946

BAY POINTE AT BONITA BAY, A CONDOMINIUM

MAY 1996

OR2801 PG0947

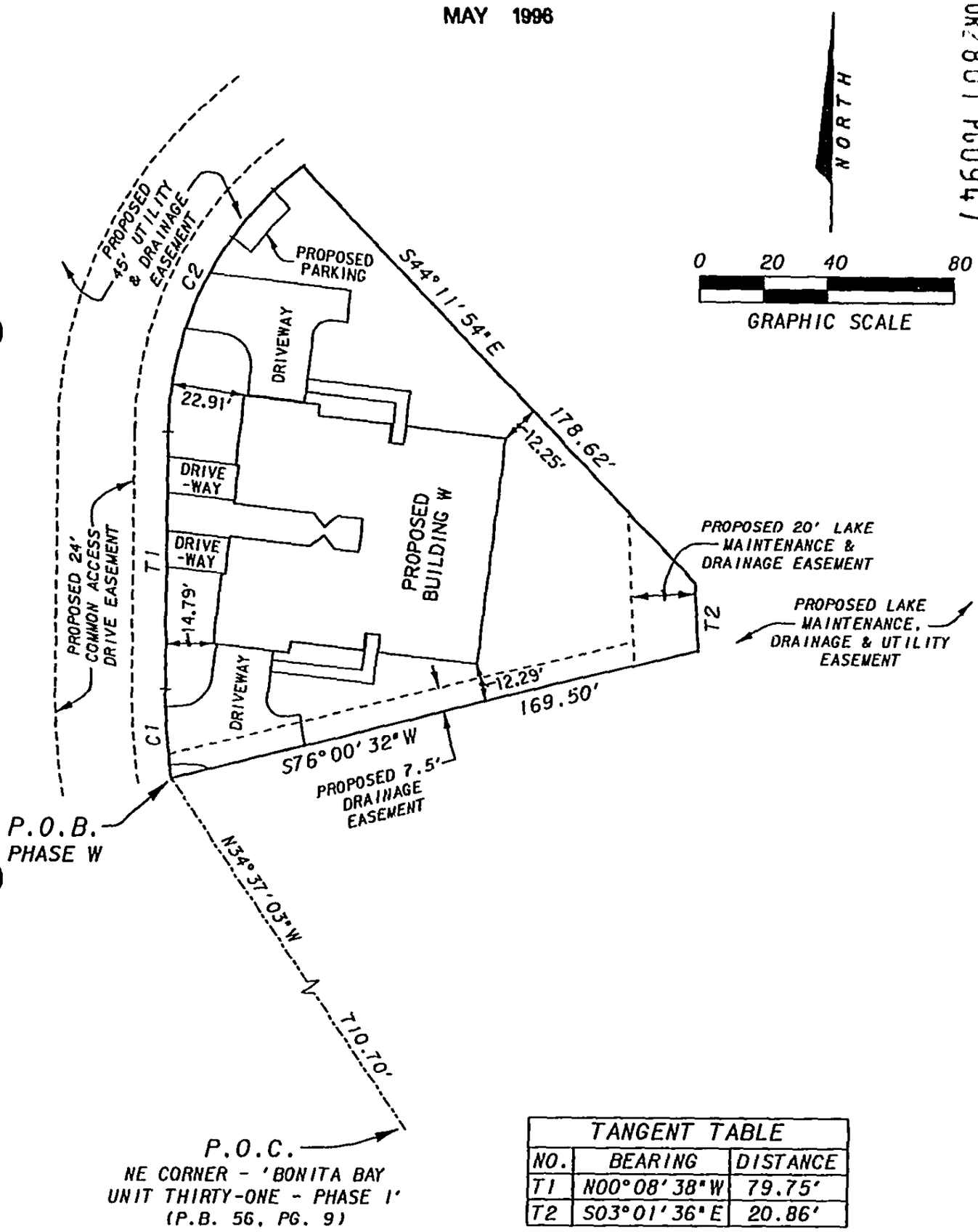

TANGENT TABLE		
NO.	BEARING	DISTANCE
T1	N00°08'38"W	79.75'
T2	S03°01'36"E	20.86'

CURVE TABLE					
NO.	RADIUS	Δ	ARC	CHORD	CHORD BEARING
C1	177.50'	08°57'48"	27.77'	27.74'	N04°37'32"W
C2	102.50'	53°28'30"	95.66'	92.23'	N26°35'37"E

POST, BUCKLEY, SCHUH & JERNIGAN, INC.
ENGINEERS, PLANNERS & SURVEYORS
6326 PRESIDENTIAL COURT
FORT MYERS, FLORIDA 33919
(941)-482-7275

PHASE W
SURVEY PLOT PLAN

BAY POINTE AT BONITA BAY, A CONDOMINIUM

MAY 1996

0 5 10 20
GRAPHIC SCALE

OR 2801 PG 0948

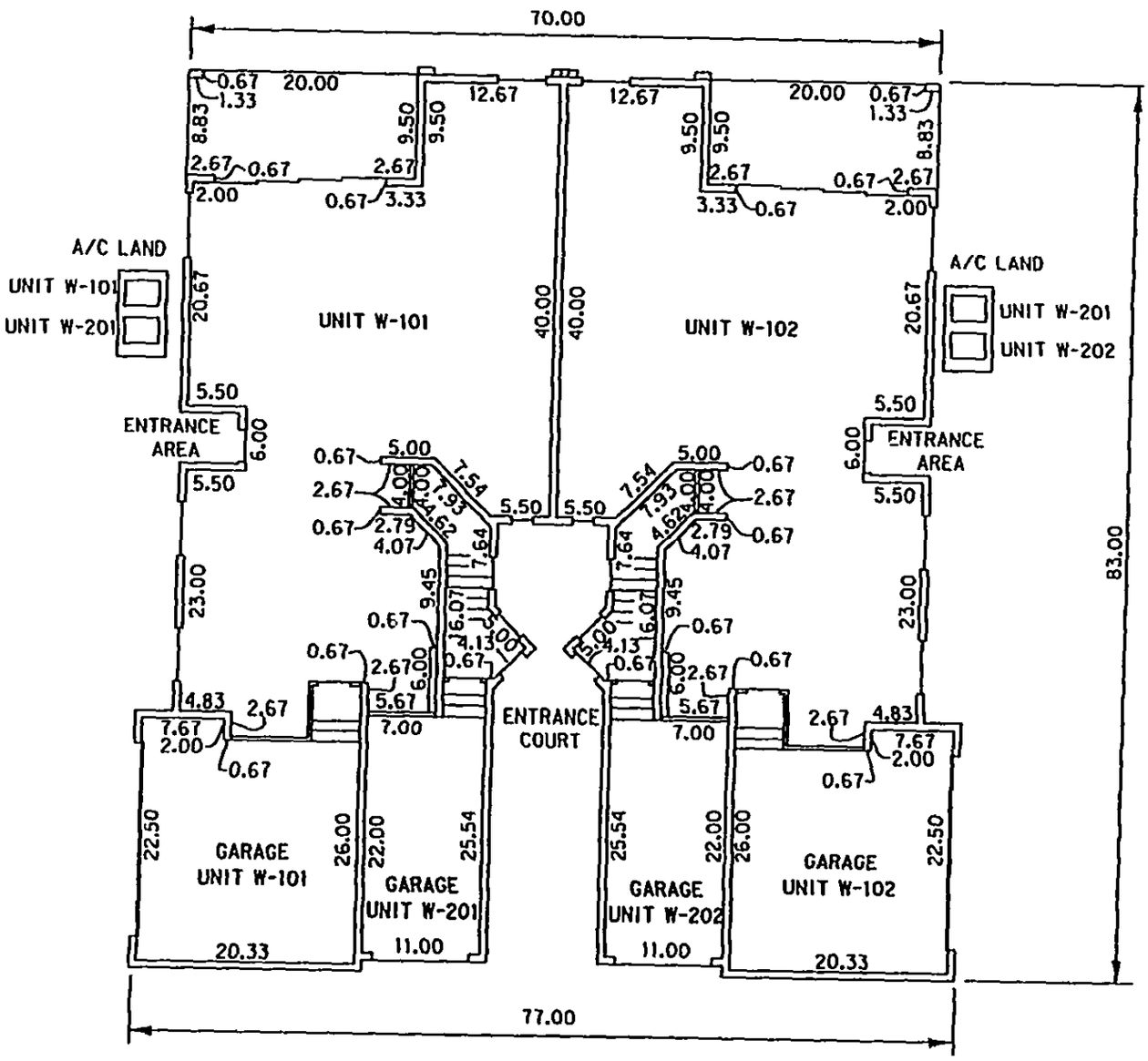

BUILDING W
FIRST FLOOR

	UNIT W-101	UNIT W-101 GARAGE	UNIT W-102	UNIT W-102 GARAGE	UNIT W-201 GARAGE	UNIT W-202 GARAGE
UPPER LIMITS:	20.25	20.25	20.25	20.25	20.25	20.25
LOWER LIMITS:	11.00	9.33	11.00	9.33	9.33	9.33

NOTES: DIMENSIONS SHOWN HEREON ARE IN FEET AND DECIMALS THEREOF.
DIMENSIONS AS SHOWN ARE SUBJECT TO NORMAL CONSTRUCTION TOLERANCES.
IMPROVEMENTS WITHIN THE CONDOMINIUM PROPERTY THAT ARE NOT UNITS OR LIMITED COMMON ELEMENTS ARE COMMON ELEMENTS

PBSJ
POST, BUCKLEY, SCHUH & JERNIGAN, INC.
ENGINEERS, PLANNERS & SURVEYORS
6326 PRESIDENTIAL COURT
FORT MYERS, FLORIDA 33919
(941)-482-7275

BAY POINTE AT BONITA BAY, A CONDOMINIUM

MAY 1996

0 5 10 20
GRAPHIC SCALE

ORB 2801 PG0949

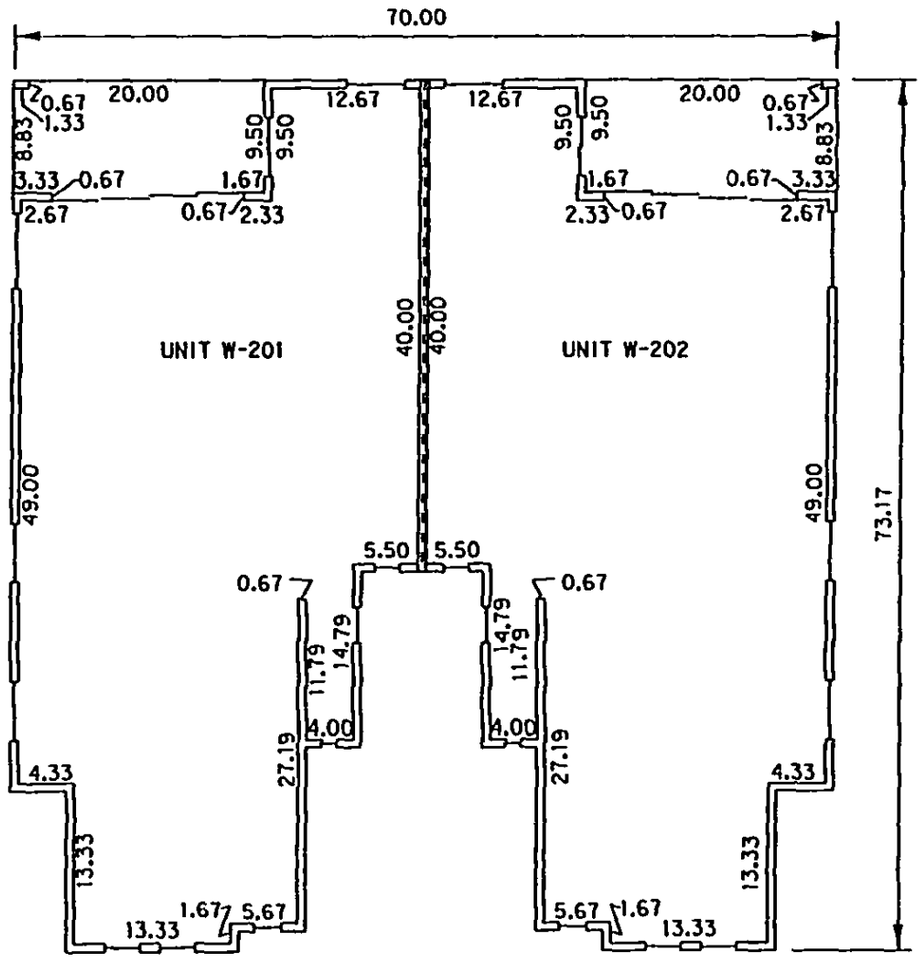

BUILDING W
SECOND FLOOR

	UNIT W-201	UNIT W-202
UPPER LIMITS:	31.31	31.31
LOWER LIMITS:	21.08	21.08

NOTES: DIMENSIONS SHOWN HEREON ARE IN FEET AND DECIMALS THEREOF.
DIMENSIONS AS SHOWN ARE SUBJECT TO NORMAL CONSTRUCTION TOLERANCES.
IMPROVEMENTS WITHIN THE CONDOMINIUM PROPERTY THAT ARE NOT UNITS OR LIMITED COMMON ELEMENTS ARE COMMON ELEMENTS

PBSJ
POST, BUCKLEY, SCHUH & JERNIGAN, INC.
ENGINEERS, PLANNERS & SURVEYORS
6326 PRESIDENTIAL COURT
FORT MYERS, FLORIDA 33919
(941)-482-7275

LEGAL DESCRIPTION
BAY POINTE AT BONITA BAY, A CONDOMINIUM
PHASE X

A portion of Sections 29 and 32 , Township 47 South, Range 25 East, Lee County, Florida being more particularly described as follows:

Commence at the Northeast corner of "Bonita Bay Unit Thirty-One, Phase I", as shown in the Public Records of Lee County, Florida, in Plat Book 56, Page 9; thence N37°17'06"W a distance of 592.40 feet to the **Point of Beginning**; thence N24°35'33"W a distance of 74.54 feet to a point of curvature of a tangent circular curve concave to the northeast; thence northwesterly along the arc of said curve, having for its elements, a radius of 177.50 feet, a central 15°29'07", a chord distance of 47.83, a chord bearing of N16°51'00"W, an arc distance of 47.97 feet; thence N76°00'32"E a distance of 169.50 feet; thence S03°01'36"E a distance of 81.19 feet; thence S52°46'21"W a distance of 99.35 feet; thence S73°24'17"W a distance of 46.72 feet to the **Point of Beginning.**

Containing 16546.431 square feet, more or less.

OR2801 PG0950

BAY POINTE AT BONITA BAY, A CONDOMINIUM

MAY 1996

OR2801 PG0951

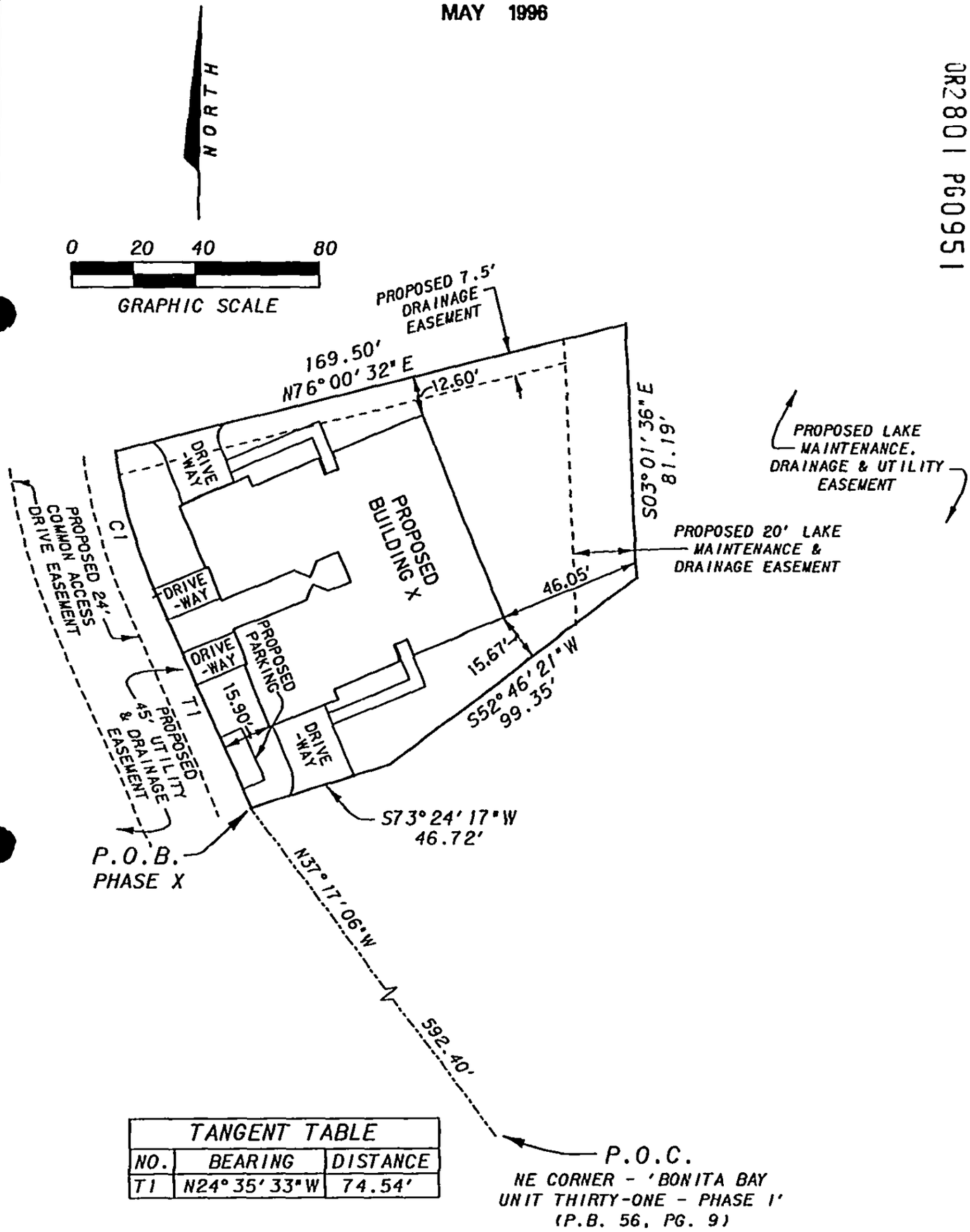

TANGENT TABLE		
NO.	BEARING	DISTANCE
T1	N24°35'33"W	74.54'

CURVE TABLE					
NO.	RADIUS	Δ	ARC	CHORD	CHORD BEARING
C1	177.50'	15°29'07"	47.97'	47.83'	N16°51'00"W

POST, BUCKLEY, SCHUH & JERNIGAN, INC.
ENGINEERS, PLANNERS & SURVEYORS
6326 PRESIDENTIAL COURT
FORT MYERS, FLORIDA 33919
(941)-482-7275

PHASE X
SURVEY PLOT PLAN

BAY POINTE AT BONITA BAY, A CONDOMINIUM

MAY 1996

0 5 10 20
GRAPHIC SCALE

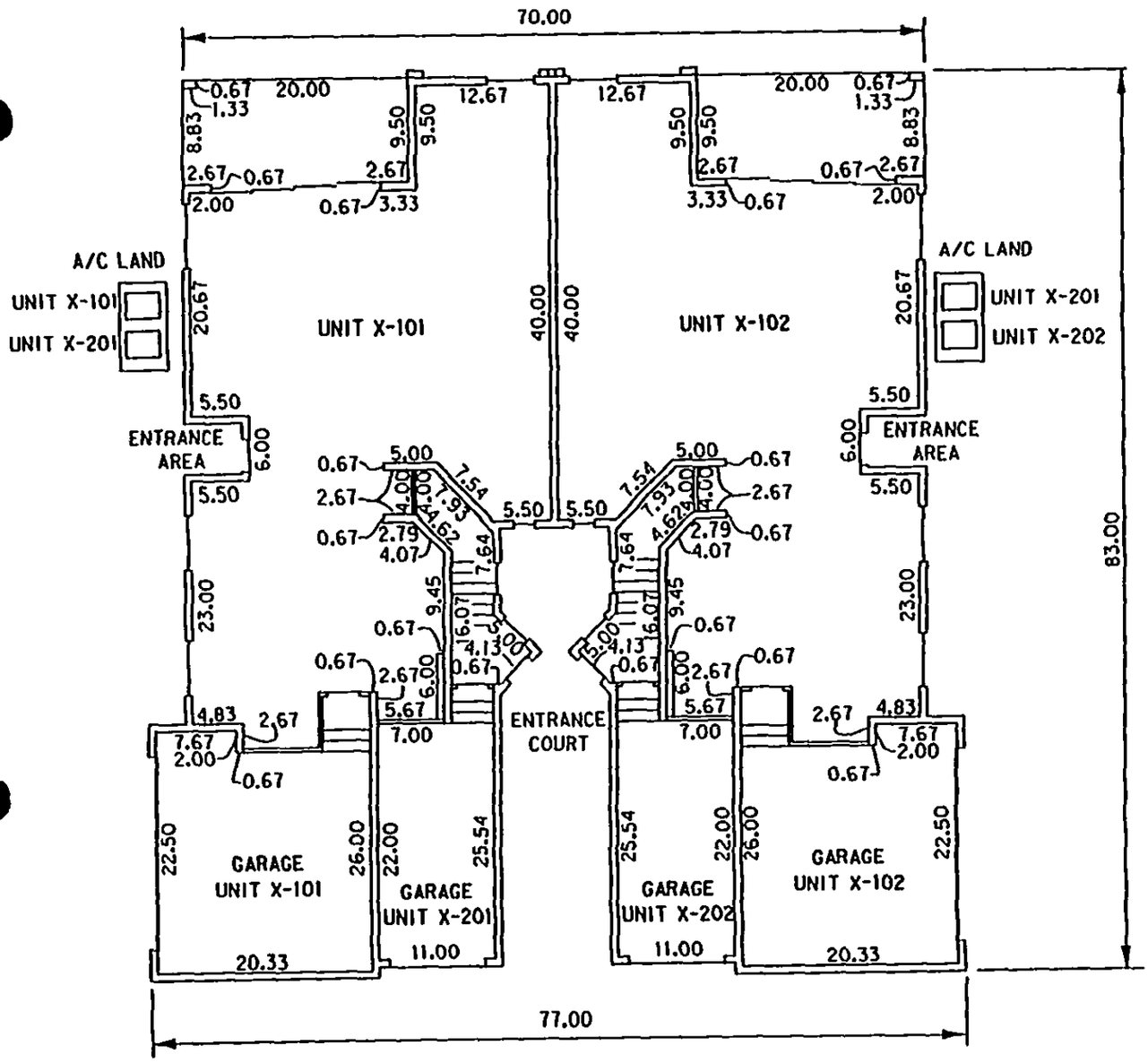

BUILDING X
FIRST FLOOR

	UNIT X-101	UNIT X-101 GARAGE	UNIT X-102	UNIT X-102 GARAGE	UNIT X-201 GARAGE	UNIT X-202 GARAGE
UPPER LIMITS:	20.25	20.25	20.25	20.25	20.25	20.25
LOWER LIMITS:	11.00	9.33	11.00	9.33	9.33	9.33

NOTES: DIMENSIONS SHOWN HEREON ARE IN FEET AND DECIMALS THEREOF.
DIMENSIONS AS SHOWN ARE SUBJECT TO NORMAL CONSTRUCTION TOLERANCES.
IMPROVEMENTS WITHIN THE CONDOMINIUM PROPERTY THAT ARE NOT UNITS OR LIMITED COMMON ELEMENTS ARE COMMON ELEMENTS

PBSJ
POST, BUCKLEY, SCHUH & JERNIGAN, INC.
ENGINEERS, PLANNERS & SURVEYORS
6326 PRESIDENTIAL COURT
FORT MYERS, FLORIDA 33919
(941) 482-7275

OR 2831 PG 0952

BAY POINTE AT BONITA BAY, A CONDOMINIUM

MAY 1996

0 5 10 20

GRAPHIC SCALE

OR2801 PG0953

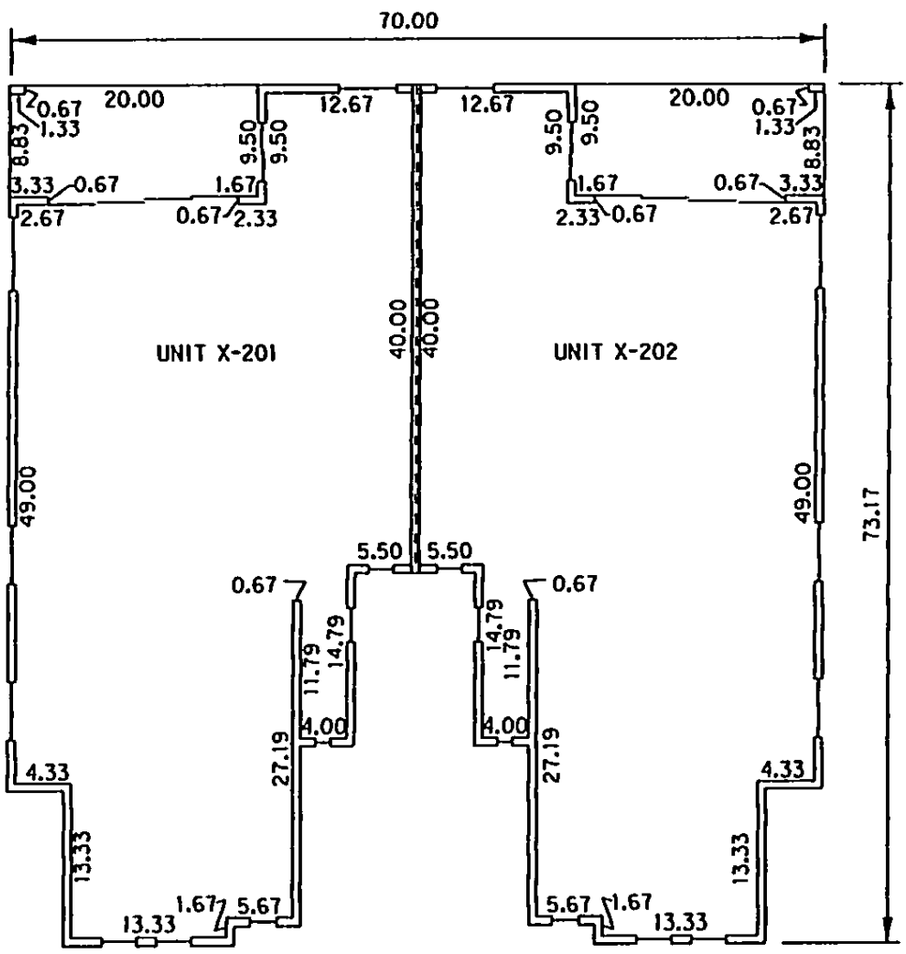

BUILDING X
SECOND FLOOR

	UNIT X-201	UNIT X-202
UPPER LIMITS:	31.31	31.31
LOWER LIMITS:	21.08	21.08

NOTES: DIMENSIONS SHOWN HEREON ARE IN FEET AND DECIMALS THEREOF.
DIMENSIONS AS SHOWN ARE SUBJECT TO NORMAL CONSTRUCTION TOLERANCES.
IMPROVEMENTS WITHIN THE CONDOMINIUM PROPERTY THAT ARE NOT UNITS OR LIMITED COMMON ELEMENTS ARE COMMON ELEMENTS

PBSJ
POST, BUCKLEY, SCHUH & JERNIGAN, INC.
ENGINEERS, PLANNERS & SURVEYORS
6326 PRESIDENTIAL COURT
FORT MYERS, FLORIDA 33919
(941)-482-7275

LEGAL DESCRIPTION
BAY POINTE AT BONITA BAY, A CONDOMINIUM
PHASE Y

A portion of Sections 29 and 32 , Township 47 South, Range 25 East, Lee County, Florida being more particularly described as follows:

Commence at the Northeast corner of "Bonita Bay Unit Thirty-One, Phase I", as shown in the Public Records of Lee County, Florida, in Plat Book 56, Page 9; thence N27°06'05"W a distance of 438.94 feet to the **Point of Beginning**; thence N81°12'35"W a distance of 128.41 feet to a point of curvature of a tangent circular curve concave to the northeast; thence northwesterly along the arc of said curve, having for its elements, a radius of 17.50 feet, a central angle of 70°35'41", a chord distance of 20.22 feet, a chord bearing of N45°54'45"W, an arc distance of 21.56 feet to a point of reverse curvature of a tangent circular curve concave to the southwest; thence northwesterly along the arc of said curve, having for its elements, a radius of 122.50, a central angle of 13°58'39", a chord distance of 29.81 feet, a chord bearing of N17°36'14"W, an arc distance of 29.88 feet; thence N24°35'33"W a distance of 20.33 feet; thence N73°24'17"E a distance of 46.72 feet; thence N52°46'21"E a distance of 99.35 feet; thence S84°50'33"E a distance of 62.83 feet; thence S10°31'16"W a distance of 150.93 feet to the **Point of Beginning.**

Containing 18491.574 square feet, more or less.

OR2801 PG0954

BAY POINTE AT BONITA BAY, A CONDOMINIUM

MAY 1996

OR2801 PG0955

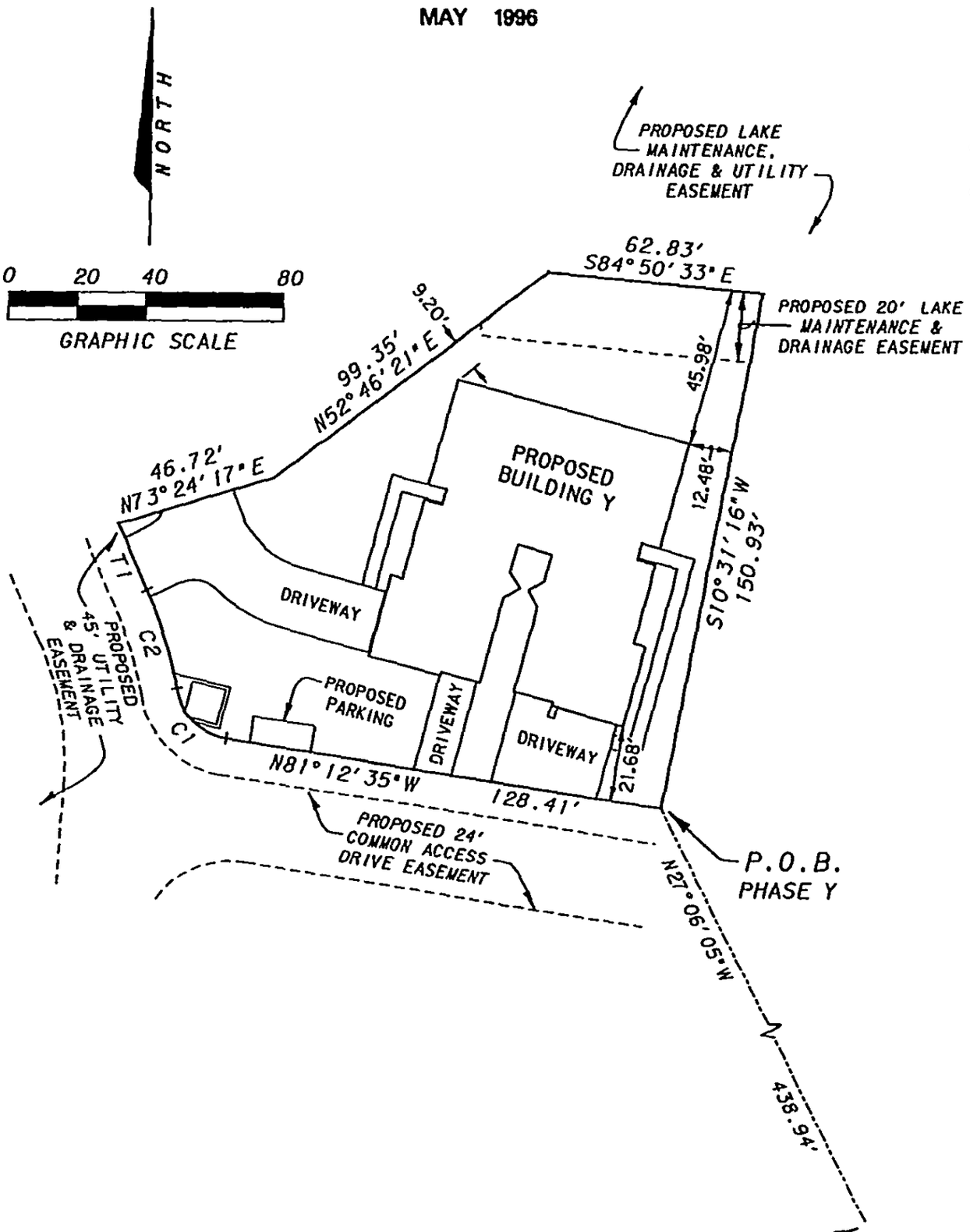

TANGENT TABLE		
NO.	BEARING	DISTANCE
T1	N24°35'33"W	20.33'

CURVE TABLE					
NO.	RADIUS	Δ	ARC	CHORD	CHORD BEARING
C1	17.50'	70°35'41"	21.56'	20.22'	N45°54'45"W
C2	122.50'	13°58'39"	29.88'	29.81'	N17°36'14"W

POST, BUCKLEY, SCHUH & JERNIGAN, INC.
ENGINEERS, PLANNERS & SURVEYORS
6326 PRESIDENTIAL COURT
FORT MYERS, FLORIDA 33919
(941)-482-7275

PHASE Y
SURVEY PLOT PLAN

BAY POINTE AT BONITA BAY, A CONDOMINIUM

MAY 1996

0 5 10 20

GRAPHIC SCALE

OR2801 PG0956

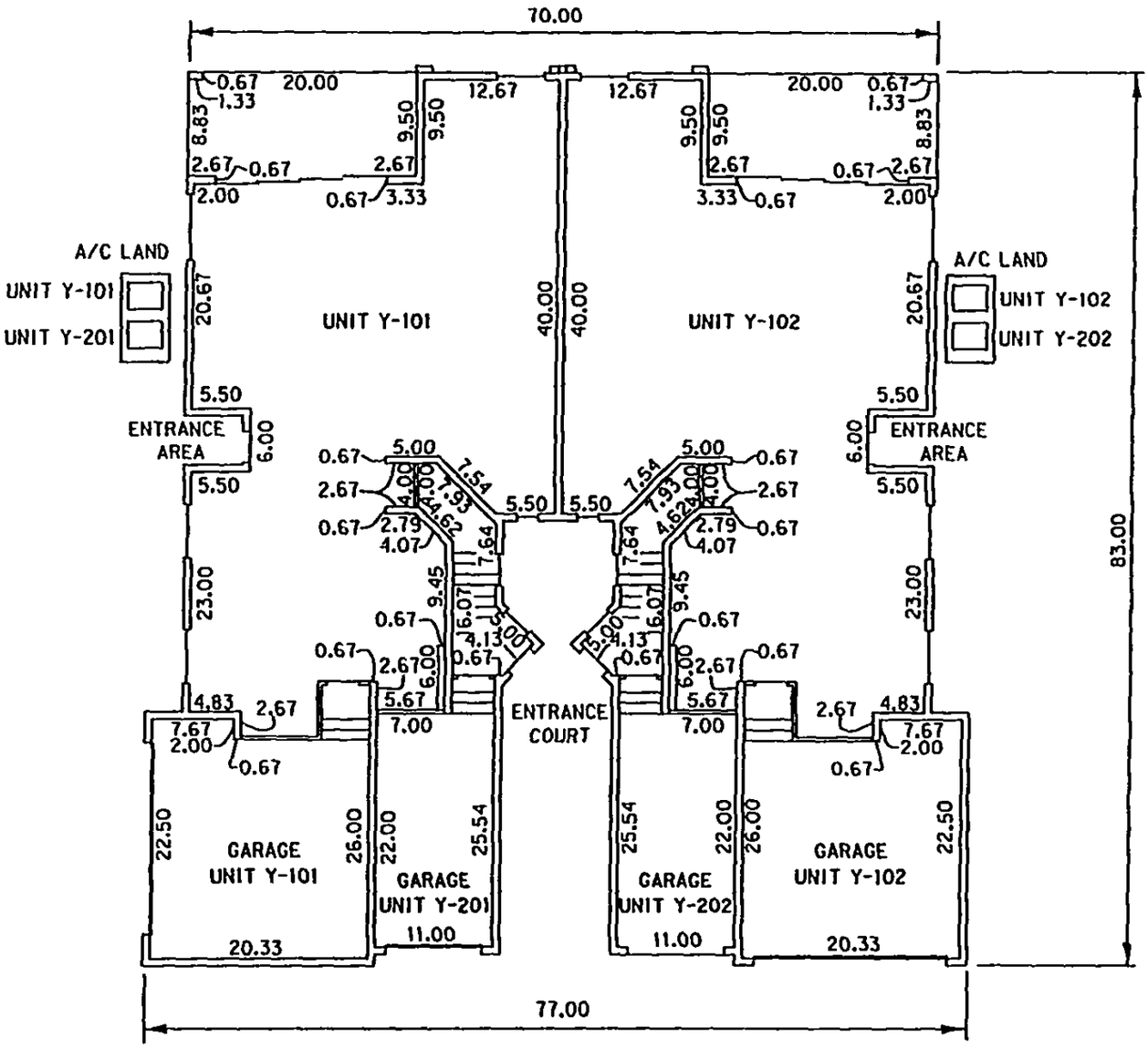

BUILDING Y
FIRST FLOOR

	UNIT Y-101	UNIT Y-101 GARAGE	UNIT Y-102	UNIT Y-102 GARAGE	UNIT Y-201 GARAGE	UNIT Y-202 GARAGE
UPPER LIMITS:	20.25	20.25	20.25	20.25	20.25	20.25
LOWER LIMITS:	11.00	9.33	11.00	9.33	9.33	9.33

NOTES: DIMENSIONS SHOWN HEREON ARE IN FEET AND DECIMALS THEREOF.
DIMENSIONS AS SHOWN ARE SUBJECT TO NORMAL CONSTRUCTION TOLERANCES.
IMPROVEMENTS WITHIN THE CONDOMINIUM PROPERTY THAT ARE NOT UNITS OR LIMITED COMMON ELEMENTS ARE COMMON ELEMENTS

PBSJ
POST, BUCKLEY, SCHUH & JERNIGAN, INC.
ENGINEERS, PLANNERS & SURVEYORS
6326 PRESIDENTIAL COURT
FORT MYERS, FLORIDA 33919
(941)-482-7275

BAY POINTE AT BONITA BAY, A CONDOMINIUM

MAY 1996

0 5 10 20

GRAPHIC SCALE

3228 01 PG 0957

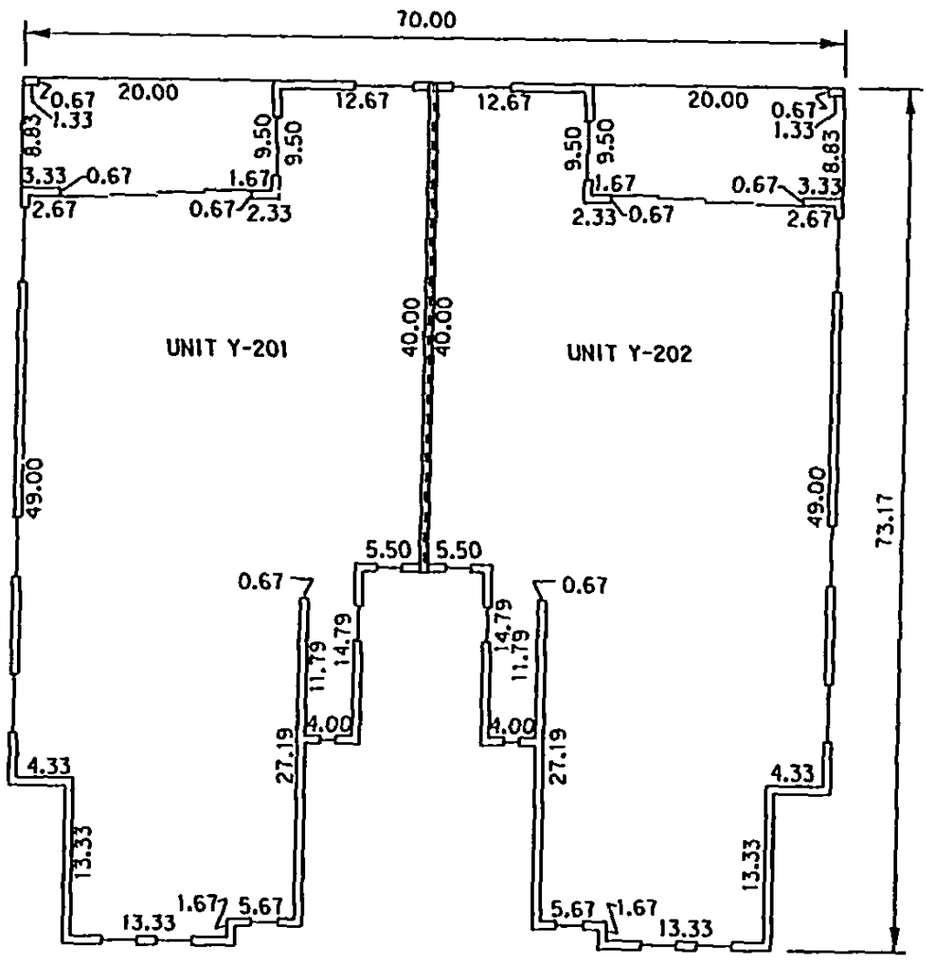

BUILDING Y
SECOND FLOOR

	UNIT Y-201	UNIT Y-202
UPPER LIMITS:	31.31	31.31
LOWER LIMITS:	21.08	21.08

NOTES: DIMENSIONS SHOWN HEREON ARE IN FEET AND DECIMALS THEREOF.
DIMENSIONS AS SHOWN ARE SUBJECT TO NORMAL CONSTRUCTION TOLERANCES.
IMPROVEMENTS WITHIN THE CONDOMINIUM PROPERTY THAT ARE NOT UNITS OR LIMITED COMMON ELEMENTS ARE COMMON ELEMENTS

PBS&J
POST, BUCKLEY, SCHUH & JERNIGAN, INC.
ENGINEERS, PLANNERS & SURVEYORS
6326 PRESIDENTIAL COURT
FORT MYERS, FLORIDA 33919
(941)-482-7275

LEGAL DESCRIPTION
BAY POINTE AT BONITA BAY, A CONDOMINIUM
PHASE Z

A portion of Sections 29 and 32 , Township 47 South, Range 25 East, Lee County, Florida being more particularly described as follows:

Commence at the Northeast corner of "Bonita Bay Unit Thirty-One, Phase I", as shown in the Public Records of Lee County, Florida, in Plat Book 56, Page 9; thence N09°13'23"W a distance of 384.99 feet to the **Point of Beginning**; thence N86°55'08"W a distance of 18.63 feet to a point of curvature of a tangent circular curve concave to the south; thence westerly along the arc of said curve, having for its elements, a radius of 522.50 feet, a central angle of 02°53'50", a chord distance of 26.42 feet, a chord bearing of N88°22'03"W, an arc distance of 26.42 feet to a point of reverse curvature of a tangent circular curve concave to the north; thence westerly along the arc of said curve, having for its elements, a radius of 477.50 feet, a central angle of 08°36'23", a chord distance of 71.66 feet, a chord bearing of N85°30'47"W, an arc distance of 71.73 feet; thence N81°12'35"W a distance of 22.07 feet; thence N10°31'16"E a distance of 150.93 feet; thence S84°50'33"E a distance of 126.93 feet; thence S06°04'16"W a distance of 148.55 feet to the **Point of Beginning**.

Containing 20067.071 square feet, more or less.

3228 01 PG 0958

BAY POINTE AT BONITA BAY, A CONDOMINIUM

MAY 1996

OR2801 PG0959

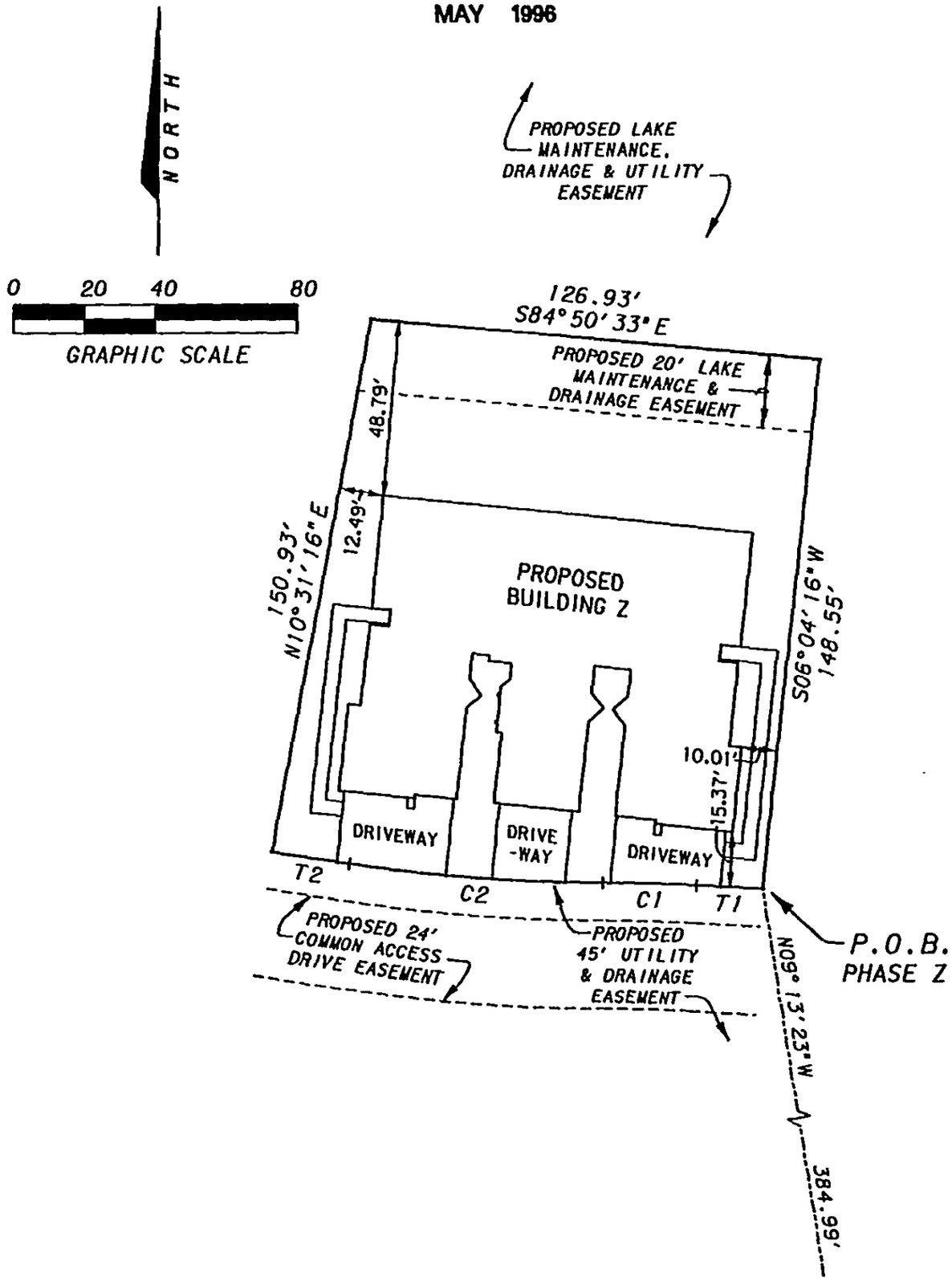

TANGENT TABLE		
NO.	BEARING	DISTANCE
T1	N86°55'08"W	18.63'
T2	N81°12'35"W	22.07'

CURVE TABLE					
NO.	RADIUS	Δ	ARC	CHORD	CHORD BEARING
C1	522.50'	02°53'50"	26.42'	26.42'	N88°22'03"W
C2	477.50'	08°36'23"	71.73'	71.66'	N85°30'47"W

PBSJ
POST, BUCKLEY, SCHUH & JERNIGAN, INC.
ENGINEERS, PLANNERS & SURVEYORS
6326 PRESIDENTIAL COURT
FORT MYERS, FLORIDA 33919
(941)-482-7275

PHASE Z
SURVEY PLOT PLAN

BAY POINTE AT BONITA BAY, A CONDOMINIUM

MAY 1998

OR2801 PG0960

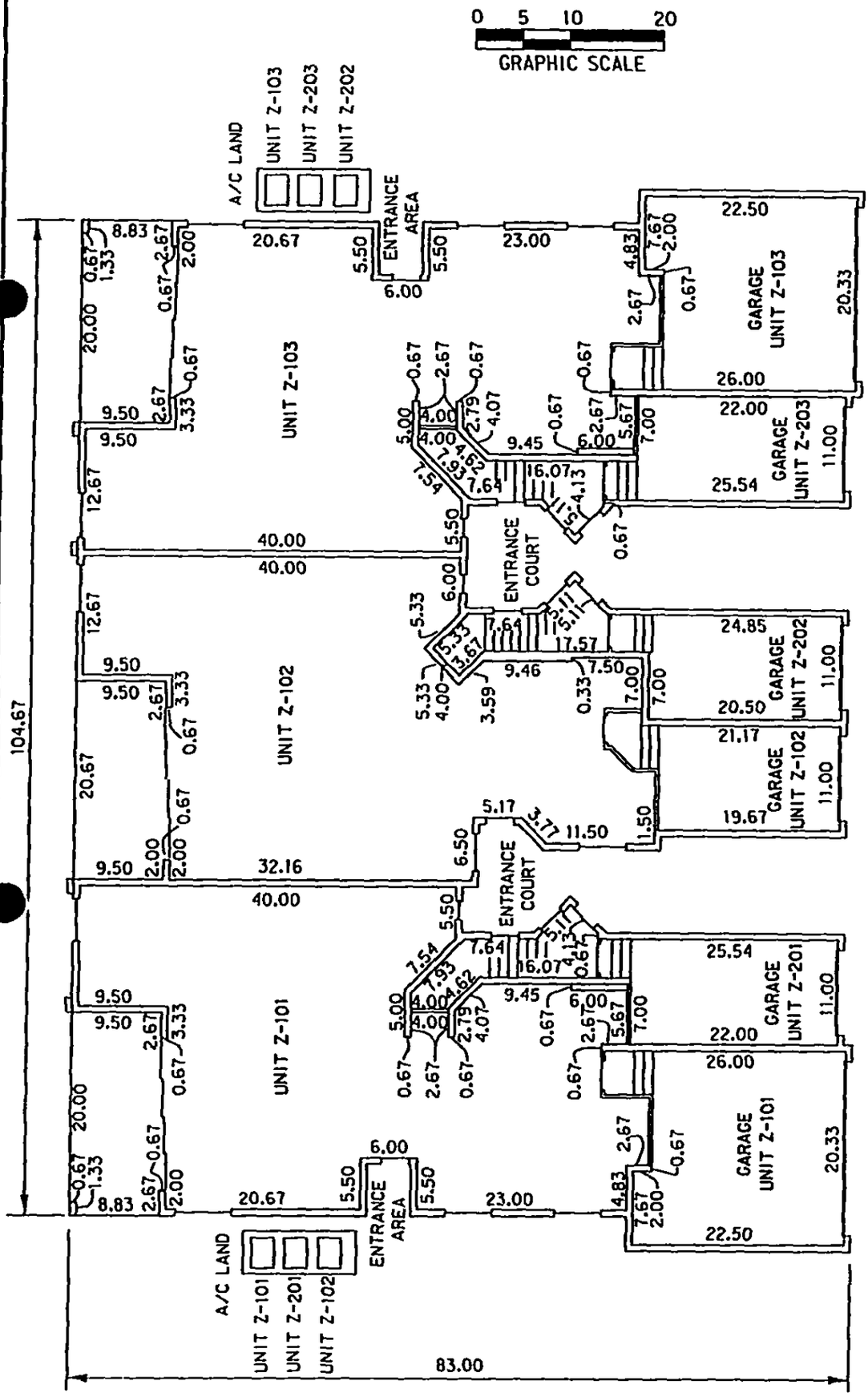

	UNIT Z-101	UNIT Z-101 GARAGE	UNIT Z-102	UNIT Z-102 GARAGE	UNIT Z-103	UNIT Z-103 GARAGE	UNIT Z-201 GARAGE	UNIT Z-202 GARAGE	UNIT Z-203 GARAGE
UPPER LIMITS:	20.25	20.25	20.25	20.25	20.25	20.25	20.25	20.25	20.25
LOWER LIMITS:	11.00	9.33	11.00	9.33	11.00	9.33	9.33	9.33	9.33

NOTES: DIMENSIONS SHOWN HEREON ARE IN FEET AND DECIMALS THEREOF.
DIMENSIONS AS SHOWN ARE SUBJECT TO NORMAL CONSTRUCTION TOLERANCES.
IMPROVEMENTS WITHIN THE CONDOMINIUM PROPERTY THAT ARE NOT UNITS OR LIMITED COMMON ELEMENTS ARE COMMON ELEMENTS

PBSJ
POST, BUCKLEY, SCHUH & JERNIGAN, INC.
ENGINEERS, PLANNERS & SURVEYORS
6326 PRESIDENTIAL COURT
FORT MYERS, FLORIDA 33919
(941)-482-7275

PHASE Z
SHEET 3 OF 4

BAY POINTE AT BONITA BAY, A CONDOMINIUM

MAY 1996

0 5 10 20
GRAPHIC SCALE

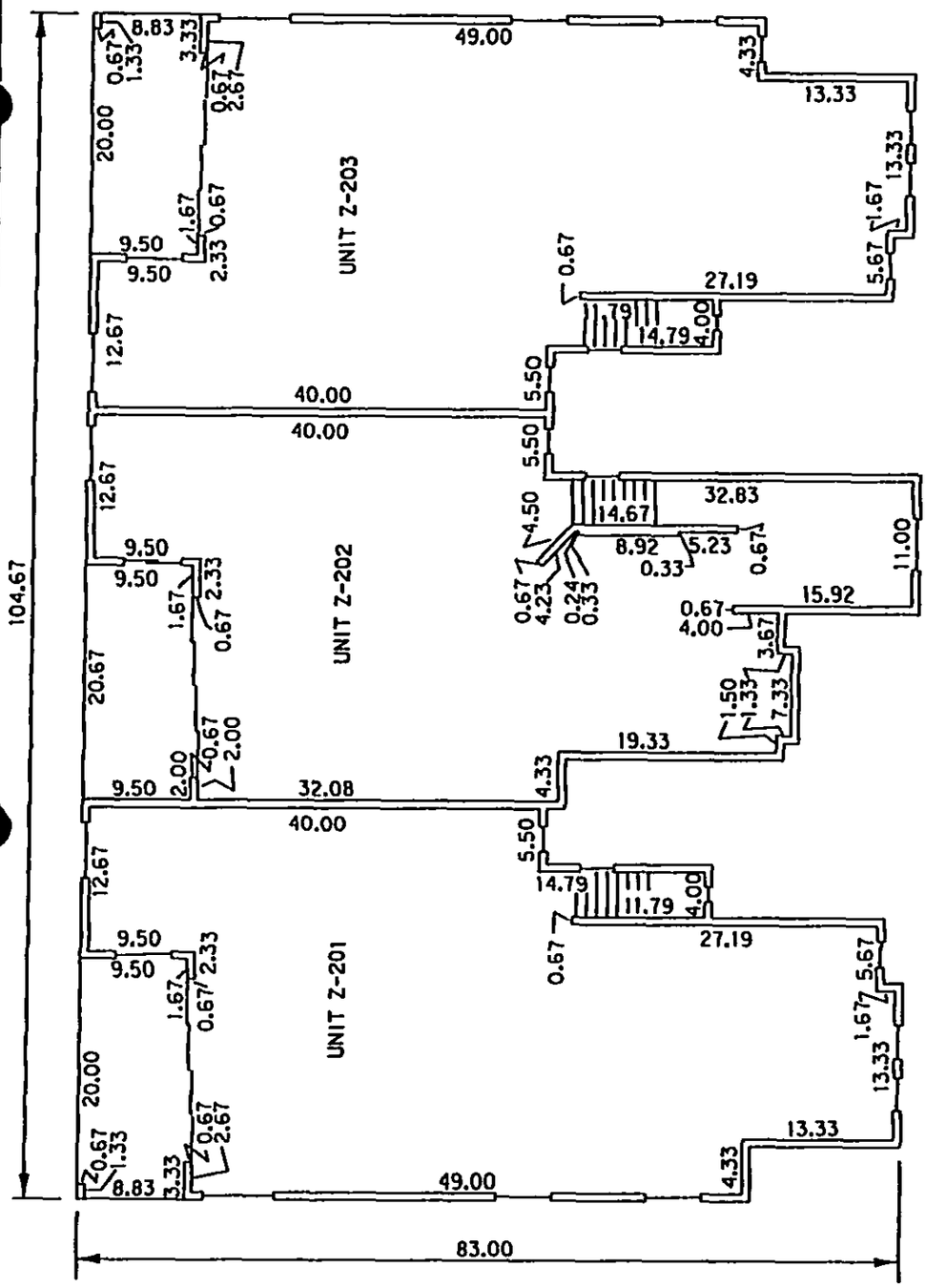

BUILDING Z
SECOND FLOOR

	UNIT Z-201	UNIT Z-202	UNIT Z-203
UPPER LIMITS:	31.31	31.31	31.31
LOWER LIMITS:	21.08	21.08	21.08

NOTES: DIMENSIONS SHOWN HEREON ARE IN FEET AND DECIMALS THEREOF.
DIMENSIONS AS SHOWN ARE SUBJECT TO NORMAL CONSTRUCTION TOLERANCES.
IMPROVEMENTS WITHIN THE CONDOMINIUM PROPERTY THAT ARE NOT UNITS OR LIMITED COMMON ELEMENTS ARE COMMON ELEMENTS

PBSJ
POST, BUCKLEY, SCHUH & JERNIGAN, INC.
ENGINEERS, PLANNERS & SURVEYORS
6326 PRESIDENTIAL COURT
FORT MYERS, FLORIDA 33919
(941)-482-7275

OR2801 PG0961

LEGAL DESCRIPTION
BAY POINTE AT BONITA BAY, A CONDOMINIUM
AMENITIES CENTER
TRACT 1

A portion of Sections 29 and 32 , Township 47 South, Range 25 East, Lee County, Florida being more particularly described as follows:

Commence at the Northeast corner of "Bonita Bay Unit Thirty-One, Phase I", as shown in the Public Records of Lee County, Florida, in Plat Book 56, Page 9; thence N09°13'23"W a distance of 384.99 feet to the **Point of Beginning**; thence N06°04'16"E a distance of 148.55 feet; thence S84°50'33"E a distance of 56.57 feet; thence S88°50'10"E a distance of 13.28 feet; thence N78°56'15"E a distance of 43.67 feet; thence S62°25'25"E a distance of 52.40 feet: thence S22°00'00W a distance of 67.44 feet to a point of curvature of a tangent circular curve concave to the east; thence southerly along the arc of said curve, having for its elements, a radius of 1204.23 feet, a central angle of 02°54'50", a chord distance of 61.24 feet, a chord bearing of S20°32'35"W, an arc distance of 61.24 feet to a point of reverse curvature of a tangent circular curve concave to the northwest; thence southeasterly along the arc of said curve, having for its elements, a radius of 25.00 feet, a central angle of 85°19'56", a chord distance of 33.89 feet, a chord bearing of S61°45'08"W, an arc distance of 37.23 feet, to a point of reverse curvature of a tangent circular curve concave to the south; thence westerly along the arc of said curve, having for its elements, a radius of 212.50 feet, a central angle of 11°20'14", a chord distance of 41.93 feet, a chord bearing of N81°15'01"W, an arc distance of 42.05 feet; thence N86°55'08"W a distance of 56.62 feet to the **Point of Beginning.**

Containing 21282.459 square feet, more or less.

OR2801 PG0962

BAY POINTE AT BONITA BAY, A CONDOMINIUM

MAY 1996

OR2801 PG0963

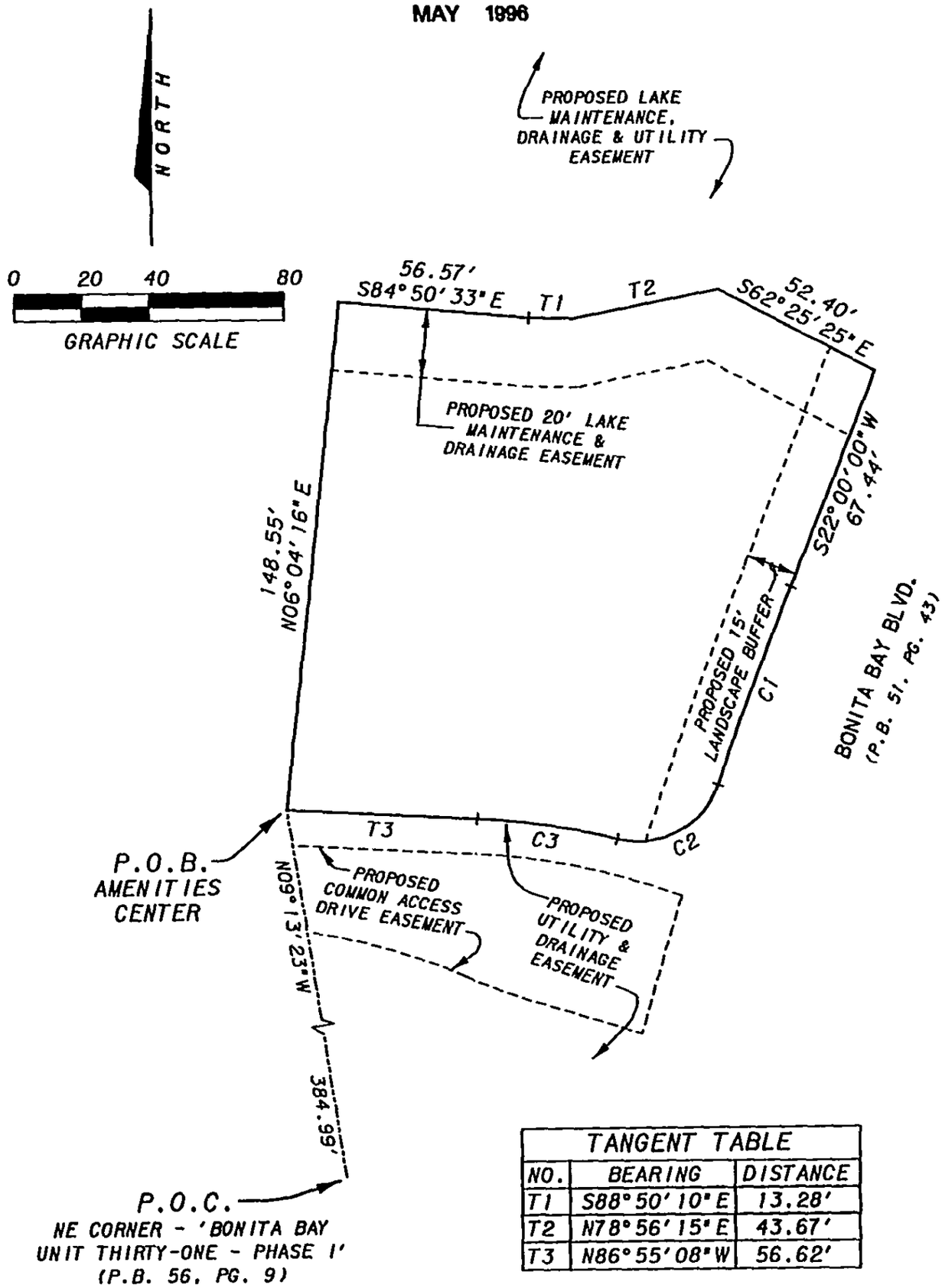

TANGENT TABLE		
NO.	BEARING	DISTANCE
T1	S88°50'10"E	13.28'
T2	N78°56'15"E	43.67'
T3	N86°55'08"W	56.62'

CURVE TABLE					
NO.	RADIUS	Δ	ARC	CHORD	CHORD BEARING
C1	1204.23'	02°54'50"	61.24'	61.24'	S20°32'35"W
C2	25.00'	85°19'56"	37.23'	33.89'	S61°45'08"W
C3	212.50'	11°20'14"	42.05'	41.98'	N81°15'01"W

POST, BUCKLEY, SCHUH & JERNIGAN, INC.
ENGINEERS, PLANNERS & SURVEYORS
6326 PRESIDENTIAL COURT
FORT MYERS, FLORIDA 33919
(941)-482-7275

AMENITIES CENTER
SURVEY PLOT PLAN

LEGAL DESCRIPTION
BAY POINTE AT BONITA BAY, A CONDOMINIUM
TRACT 2
(WETLAND RESERVE EASEMENT)

A portion of Sections 29 and 32 , Township 47 South, Range 25 East, Lee County, Florida being more particularly described as follows:

Begin at the Northeast corner of "Bonita Bay Unit Thirty-One, Phase I", as shown in the Public Records of Lee County, Florida, in Plat Book 56, Page 9; said point lying on the arc of a circular curve concave to the east; thence northerly along the Westerly Right-of-Way line of Bonita Bay Blvd. and along the arc of said curve, having for its elements, a radius of 1204.23 feet, a central angle of 08°17'07", a chord distance of 173.99 feet, a chord bearing of N04°28'58"E, an arc distance of 174.14 feet; thence N82°55'29"W a distance of 36.35 feet; thence N32°12'12"W a distance of 20.37 feet; thence N89°51'03"W a distance of 15.76 feet; thence S43°59'20"W a distance of 24.48 feet; thence S44°56'12"W a distance of 22.20 feet; thence S64°24'22"W a distance of 18.65 feet; thence S53°13'08"W a distance of 19.91 feet; thence S27°27'19"E a distance of 20.31 feet; thence S48°52'23"W a distance of 12.12 feet; thence S66°24'25"W a distance of 20.01 feet; thence N85°11'12"W a distance of 10.48 feet; thence N78°49'13"W a distance of 10.76 feet; thence N87°46'24"W a distance of 21.84 feet; thence N21°02'38"E a distance of 24.02 feet; thence N29°59'54"W a distance of 12.98 feet; thence S27°43'09"W a distance of 20.23 feet; thence N89°22'32"W a distance of 18.53 feet; thence N12°11'41"W a distance of 21.18 feet; thence N14°24'02"W a distance of 11.73 feet; thence N21°39'33"E a distance of 27.08 feet; thence S89°46'15"E a distance of 11.27 feet; thence S88°14'48"E a distance of 11.27 feet; thence N28°30'29"W a distance of 7.77 feet; thence N43°59'50"W a distance of 17.95 feet; thence N48°20'11"W a distance of 17.27 feet; thence S56°33'05"W a distance of 21.13 feet; thence N30°26'59"W a distance of 16.09 feet; thence N88°06'05"W a distance of 28.22 feet; thence S76°32'08"W a distance of 23.28 feet; thence N60°58'42"W a distance of 14.35 feet; thence N56°47'59"W a distance of 17.25 feet; thence N84°56'14"W a distance of 20.67 feet; thence S61°53'05"W a distance of 21.57 feet; thence N79°58'35"W a distance of 2.94 feet to a point on the arc of a circular curve concave to the west; thence southerly along the arc of said curve, having for its elements, a radius of 322.50 feet, a central angle of 03°32'46", a chord distance of 19.96 feet, a chord bearing of S09°56'35"W, an arc distance of 19.96 feet to a point of tangency; thence S11°42'58"W a distance of 110.21 feet to a point of curvature of a tangent circular curve concave to the northwest; thence southwesterly along the arc of said curve, having for its elements a radius of 122.50 feet, a central angle of 14°37'07", a chord distance of 31.17 feet, a chord bearing of S19°01'32"W, an arc distance of 31.26 feet to a point of reverse curvature of a tangent circular curve concave to the southeast; thence southwesterly along the arc of said curve, having for its elements, a radius of 87.50 feet, a central angle of 26°13'48", a chord distance of 39.71 feet, a chord bearing of S13°13'11"W, an arc distance of 40.06 feet to a point of reverse curvature of a tangent circular curve concave to the northwest; thence southwesterly along the arc of said curve, having for its elements, a radius of 57.50 feet, a central angle of 117°57'18", a chord distance of 98.55 feet, a chord bearing of S59°04'56"W, an arc distance of 118.38 feet; thence S28°03'31"W a distance of 12.47 feet; thence S60°21' 38"W a distance of 22.73 feet; thence S22°41'56"W a distance of 26.86 feet; thence S00°16'24"E a distance of 20.56 feet; thence S06°12'20"E a distance of 20.01 feet; thence S52°37'40"W a distance of 26.72 feet; thence S43°20'24"W a distance of 49.95 feet; thence S67°26'57"W a distance of 30.51 feet; thence S39°48'27"W a distance of 26.39 feet; thence N65°50'56"E a distance of 71.31 feet; thence N43°51'53"E a distance of 234.97 feet; thence S89°39'35"E a distance of 387.37 feet to the **Point of Beginning**; (the preceding three (3) courses being coincidental with the Northerly boundary of said "Bonita Bay Unit Thirty-One, Phase I" plat).

Containing 41585.983 square feet, more or less.

OR2001 PG0964

JOHNSON ENGINEERING, INC.
ENGINEERS. SURVEYORS AND ECOLOGISTS

FORT MYERS
NAPLES
PORT CHARLOTTE

2158 JOHNSON STREET
TELEPHONE (941) 334-0046
TELECOPIER (941) 334-3661
POST OFFICE BOX 1550
FORT MYERS, FLORIDA
33902-1550

CARL E. JOHNSON
1911-1968

April 23, 1996

OR 2801 PG 0965

DESCRIPTION
UTILITY & DRAINAGE EASEMENT
WITHIN PARCEL 1
PROPOSED BONITA BAY UNIT THIRTY-SEVEN
SECTIONS 29 & 32, T. 47 S., R. 25 E.
LEE COUNTY, FLORIDA

TRACT 3

A tract or parcel of land for Utility and Drainage Easement purposes lying in Parcel 1 in proposed Bonita Bay Unit Thirty-Seven in Sections 29 and 32, Township 47 South, Range 25 East, Lee County, Florida which tract or parcel is described as follows:

From the Northeast corner of Bonita Bay Unit Thirty-One, Phase I, Plat Book 56 at Page 9, Lee County Records run Northeasterly along the Northwesterly line of Bonita Bay Boulevard as shown on Plat of Bonita Bay Unit Twenty, Plat Book 51 at Page 43, said Public Records along the arc of a curve to the right of radius 1204.23 feet (delta 13° 29' 03") (chord 282.75 feet) (chord bearing N 07° 04' 56" E) for 283.41 feet to the Point of Beginning of the herein described parcel.

From said Point of Beginning continue Northeasterly along said Northwesterly line along the arc of a curve to the right of radius 1204.23 feet (delta 05° 15' 42") (chord 110.55 feet) (chord bearing N 16° 27' 19" E) for 110.59 feet; thence run Southwesterly and Westerly along the arc of a curve to the right of radius 25.00 feet (delta 85° 19' 56") (chord 33.89 feet) (chord bearing S 61° 45' 08" W) for 37.23 feet to a point of reverse curvature; thence run Westerly along the arc of a curve to the left of radius 212.50 feet (delta 11° 20' 14") (chord 41.98 feet) (chord bearing N 81° 15' 01" W) for 42.05 feet to a point of tangency; thence run N 86° 55' 08" W for 75.25 feet to a point of curvature; thence run Westerly along the arc of a curve to the left of radius 522. 50 feet (delta 02° 53' 50") (chord 26.42 feet) (chord bearing N 88° 22' 03" W) for 26.42 feet to a point of reverse curvature; thence run Westerly along the arc of a curve to the right of radius 477.50 feet (delta 08° 36' 23") (chord 71.66 feet) (chord bearing N 85° 30' 47" W) for 71.73 feet to a point of tangency; thence run N 81° 12' 35" W for 150.48 feet to a point of curvature; thence run Northwesterly along the arc of a curve to the right of radius 17.50 feet (delta 70° 35' 41") (chord 20.22 feet) (chord bearing N 45° 54' 45" W) for 21.56 feet to a point of reverse curvature; thence run Northwesterly along the arc of a curve to the left of radius 122.50 feet (delta 13° 58' 39") (chord 29.81 feet) (chord

CHAIRMAN
ARCHIE T. GRANT, JR.

PRESIDENT
FORREST H. BANKS

JOSEPH W. EBNER
STEVEN K. MORRISON
ANDREW D. TILTON
JEFFREY C. COONER
CARL A. BARRACO
KENTON R. KEILING
W. DAVID KEY, JR.
W. BRITT POMEROY
DAN W. DICKEY
KEVIN M. WINTER
GARY R. BULL

ASSOCIATES
GEORGE J. KALAL
STEPHEN W. ADAMS
PATRICIA H. NEWTON

CONSULTANT
LESTER L. BULSON

OR2801 PG0966

bearing N 17° 36' 13" W) for 29.88 feet to a point of tangency; thence run N 24° 35' 33" W for 20.32 feet; thence run S 73° 24' 17" W for 45.44 feet; thence run S 24° 35' 33' E for 26.64 feet to a point of curvature; thence run Southeasterly along the arc of a curve to the right of radius 77.50 feet (delta 28° 10' 02") (chord 37.72 feet) (chord bearing S 10° 30' 32" E) for 38.10 feet to a point of tangency; thence run S 03° 34' 29" W for 146.75 feet to a point of curvature; thence run Southwesterly along the arc of a curve to the right of radius 277.50 feet (delta 08° 08' 29") (chord 39.40 feet) (chord bearing S 07° 38' 44" W) for 39.43 feet to a point of tangency; thence run S 11° 42' 58" W for 103.86 feet to a point of curvature; thence run Southerly, Southwesterly and Westerly along the arc of a curve to the right of radius 32.50 feet (delta 79° 39' 01") (chord 41.63 feet) (chord bearing S 51° 32' 29" W) for 45.18 feet to a point of reverse curvature; thence run Westerly, Southwesterly, Southerly, Southeasterly, Easterly and Northeasterly along the arc of a curve to the left of radius 57.50 feet (delta 271° 15' 42") (chord 80.42 feet) (chord bearing S 44° 15' 52" E) for 272.23 feet to a point of reverse curvature; thence run Northeasterly along the arc of a curve to the right of radius 87.50 feet (delta 26° 13' 48") (chord 39.71 feet) (chord bearing N 13° 13' 11" E) for 40.06 feet to a point of reverse curvature; thence run Northeasterly along the arc of a curve to the left of radius 122.50 feet (delta 14° 37' 07") (chord 31.17 feet) (chord bearing N 19° 01' 31" E) for 31.26 feet to a point of tangency; thence run N 11° 42' 58" E for 110.21 feet to a point of curvature; thence run Northeasterly along the arc of a curve to the left of radius 322.50 feet (delta 08° 08' 29") (chord 45.79 feet) (chord bearing N 07° 38' 44" E) for 45.83 feet to a point of tangency; thence run N 03° 34' 29" E for 100.34 feet to a point of curvature; thence run Northeasterly along the arc of a curve to the right of radius 17.50 feet (delta 95° 12' 56") (chord 25.85 feet) (chord bearing N 51° 10' 57" E) for 29.08 feet to a point of tangency; thence run S 81° 12' 35" E for 138.89 feet to a point of curvature; thence run Easterly along the arc of a curve to the left of radius 522.50 feet (delta 08° 36' 23") (chord 78.41 feet) (chord bearing S 85° 30' 47" E) for 78.48 feet to a point of reverse curvature; thence run Easterly along the arc of a curve to the right of radius 477.50 feet (delta 04° 12' 58") (chord 35.13 feet) (chord bearing S 87° 42' 29" E) for 35.14 feet to a point of compound

curvature; thence run Southeasterly along the arc of a curve to the right of radius 187.50 feet (delta 18° 35' 46") (chord 60.59 feet) (chord bearing S 76° 18' 07" E) for 60.86 feet to a point of reverse curvature; thence run Southeasterly along the arc of a curve to the left of radius 212.50 feet (delta 06° 32' 14") (chord 24.23 feet) (chord bearing S 70° 16' 21" E) for 24.25 feet to a point of tangency; thence run S 73° 32' 28" E for 8.08 feet to a point of curvature; thence run Southeasterly along the arc of a curve to the right of radius 25.00 feet (delta 87° 21' 56") (chord 34.53 feet) (chord bearing S 29° 51' 30" E) for 38.12 feet to the Point of Beginning.

Bearings hereinabove mentioned are based on the West line of Tract "A" of Bonita Bay Unit Twenty as being S 04° 45' 00" E.

OR2801 PG0967

W. Britt Pomeroy, Jr. (For The Firm)
Professional Land Surveyor
Florida Certificate No. 4448

WBP/kc
20965c

LEGAL DESCRIPTION
BAY POINTE AT BONITA BAY, A CONDOMINIUM
TRACT 4
(WETLAND RESERVE EASEMENT)

A portion of Sections 29 and 32 , Township 47 South, Range 25 East, Lee County, Florida being more particularly described as follows:

Commence at the Northeast corner of "Bonita Bay Unit Thirty-One, Phase I", as shown in the Public Records of Lee County, Florida, in Plat Book 56, Page 9; thence S72°18'21"W a distance of 645.81 feet to the **Point of Beginning;** thence N45°43'53"W a distance of 18.69 feet; thence S87°33'25"W a distance of 8.08 feet; thence N31°27'49"W a distance of 14.48 feet; thence N68°01'07"W a distance of 19.33 feet; thence N01°15'38"W a distance of 36.77 feet; thence N03°52'45"E a distance of 28.17 feet; thence N07°27'42"E a distance of 50.01 feet; thence N84°02'44"E a distance of 12.19 feet; thence N64°19'35"E a distance of 37.16 feet; thence N72°29'25"E a distance of 27.56 feet; thence N68°18'53"E a distance of 26.87 feet; thence N40°18'38"E a distance of 57.61 feet; thence N26°28'10"W a distance of 49.03 feet; thence N55°56'00"W a distance of 22.89 feet; thence N28°10'13"W a distance of 20.30 feet; thence N45°54'36"W a distance of 12.23 feet; thence N31°05'55"W a distance of 18.82 feet; thence N05°33'24"E a distance of 42.97 feet; thence N02°16'50"E a distance of 35.27 feet; thence N26°24'37"E a distance of 28.61 feet; thence N28°49'30"W a distance of 20.97 feet; thence N39°01'39"E a distance of 49.94 feet; thence N06°30'16"E a distance of 21.22 feet; thence N00°39'16"W a distance of 28.99 feet; thence N17°42'26"W a distance of 25.34 feet; thence N39°09'08"W a distance of 36.84 feet; thence N17°22'42"W a distance of 23.34 feet; thence S73°24'17"W a distance of 156.49 feet; thence S04°40'39"E a distance of 251.65 feet; thence S09°30'00"W a distance of 301.33 feet; thence S80°31'00"E, along the Northerly Boundary of said "Bonita Bay Unit Thirty-One, Phase I" plat, a distance of 113.16 feet to the **Point of Beginning.**

Containing 74984.649 square feet, more or less.

OR2801 PG0968

LEGAL DESCRIPTION
BAY POINTE AT BONITA BAY, A CONDOMINIUM
TRACT 5
(WETLAND RESERVE EASEMENT)

A portion of Sections 29 and 32 , Township 47 South, Range 25 East, Lee County, Florida being more particularly described as follows:

Commence at the Northeast corner of "Bonita Bay Unit Thirty-One, Phase I", as shown in the Public Records of Lee County, Florida, in Plat Book 56, Page 9; thence N52°50'37"W a distance of 687.19 feet to the **Point of Beginning**; thence N17°22'42"W a distance of 18.73 feet; thence N21°54'29"W a distance of 30.53 feet; thence N15°24'20"W a distance of 32.50 feet; thence N06°43'41"E a distance of 19.33 feet; thence N22°28'55"W a distance of 29.72 feet; thence N07°00'43"W a distance of 37.02 feet; thence N40°41'40"W a distance of 28.83 feet; thence N16°24'37"E a distance of 24.91 feet; thence N13°38'35"E a distance of 32.97 feet; thence N23°52'13"E a distance of 28.06 feet; thence N13°11'16"W a distance of 41.27 feet; thence N09°05'40"W a distance of 31.35 feet; thence N46°22'49"E a distance of 30.56 feet; thence N10°28'33"W a distance of 40.25 feet; thence N13°02'21"E a distance of 28.44 feet; thence N58°39'19"W a distance of 19.41 feet; thence N31°15'08"E a distance of 29.49 feet; thence N45°23'45"E a distance of 21.05 feet; thence N18°43'42"E a distance of 18.97 feet; thence N51°25'39"E a distance of 30.48 feet; thence N47°57'03"E a distance of 7.41 feet; thence S89°29'55"W a distance of 219.81 feet; thence S04°40'39"E a distance of 560.55 feet; thence N73°24'17"E a distance of 156.49 feet to the **Point of Beginning.**

Containing 78035.641 square feet, more or less.

OR2801 PG0969

JOHNSON ENGINEERING, INC.
ENGINEERS, SURVEYORS AND ECOLOGISTS

FORT MYERS
NAPLES
PORT CHARLOTTE

2158 JOHNSON STREET
TELEPHONE (941) 334-0046
TELECOPIER (941) 334-3661
POST OFFICE BOX 1550
FORT MYERS, FLORIDA
33902-1550

CARL E. JOHNSON
1911-1988

April 23, 1996

DESCRIPTION
UTILITY & DRAINAGE EASEMENT
WITHIN PARCEL 2
PROPOSED BONITA BAY UNIT THIRTY-SEVEN
SECTIONS 29 & 32, T. 47 S., R. 25 E.
LEE COUNTY, FLORIDA
TRACT 6

A tract or parcel of land for Utility and Drainage Easement purposes lying in Parcel 2 in proposed Bonita Bay Unit Thirty-Seven in Sections 29 and 32, Township 47 South, Range 25 East, Lee County, Florida which tract or parcel is described as follows:

From the Southwest corner of Tract "A" of Bonita Bay, Unit Twenty as recorded in Plat Book 51 at Pages 43 through 46, Lee County Records run S 04° 45' 00" E along the West line of lands described in Official Record Book 2584 at Pages 4136 through 4140, Lee County Records for 55.14 feet to the Southwest corner of said lands; thence run S 04° 40' 39" E for 560.55 feet; thence run N 73° 24' 17" E for 308.08 feet to the Point of Beginning of the herein described parcel.

From said Point of Beginning continue N 73° 24' 17" E for 45.44 feet; thence run N 24° 35' 33" W for 74.54 feet to a point of curvature; thence run Northwesterly along the arc of a curve to the right of radius 177.50 feet (delta 24° 26' 55") (chord 75.17 feet) (chord bearing N 12° 22' 05' W for 75.74 feet to a point of tangency; thence run N 00° 08' 38" W for 79.75 feet to a point of curvature; thence run Northerly, Northeasterly and Easterly along the arc of a curve to the right of radius 102.50 feet (delta 85° 13' 26") (chord 138.79 feet) (chord bearing N 42° 28' 05" E) for 152.46 feet to a point of tangency; thence run N 85° 04' 48" E for 134.69 feet to a point of curvature; thence run Easterly along the arc of a curve to the right of radius 727.50 feet (delta 01° 28' 38") (chord 18.76 feet) (chord bearing N 85° 49' 07" E) for 18.76 feet; thence run S 02° 34' 58" E for 45.00 feet; thence run Westerly along the arc of a curve to the left of radius 772.50 feet (delta 01° 31' 38") (chord 20.59 feet) (chord bearing S 85° 50' 37" W) for 20.59 feet to a point of tangency; thence run S 85° 04' 48" W for 134.69 feet to a point of curvature; thence run Westerly along the arc of a curve to the left of radius 147.50 feet (delta 10° 44' 55") (chord 27.63 feet) (chord bearing S 79° 42' 20" W) for 27.67 feet to a point of reverse curvature; thence run Westerly and Northwesterly along the arc of a curve to the right of radius 17.50 feet (delta 82° 16' 43") (chord 23.03 feet) (chord bearing N 64° 31' 45" W) for 25.13 feet to a point of compound curvature; thence run Northwesterly along the arc of a

CHAIRMAN
ARCHIE T. GRANT, JR.

PRESIDENT
FORREST H. BANKS

JOSEPH W. EBNER
STEVEN K. MORRISON
ANDREW D. TILTON
JEFFREY C. COONER
CARL A. BARRACO
KENTON R. KEILING
W. DAVID KEY, JR.
W. BRITT POMEROY
DAN W. DICKEY
KEVIN M. WINTER
GARY R. BULL

ASSOCIATES
GEORGE J. KALAL
STEPHEN W. ADAMS
PATRICIA H. NEWTON

CONSULTANT
LESTER L. BULSON

OR2801 PG0970

curve to the right of radius 77.50 feet (delta 23° 14' 46") (chord 31.23 feet) (chord bearing N 11° 46' 01" W) for 31.44 feet to a point of tangency; thence run N 00° 08' 38" W for 36.74 feet; thence run S 89° 51' 22" W for 45.00 feet; thence run S 00° 08' 38" E for 36.74 feet to a point of curvature; thence run Southeasterly along the arc of a curve to the left of radius 122.50 feet (delta 26° 52' 37") (chord 56.94 feet) (chord bearing S 13° 34' 56" E) for 57.46 feet to a point of reverse curvature; thence run Southeasterly, Southerly and Southwesterly along the arc of a curve to the right of radius 17.50 feet (delta 73° 13' 03") (chord 20.87 feet) (chord bearing S 09° 35' 16" W) for 22.36 feet to a point of reverse curvature; thence run Southwesterly along the arc of a curve to the left of radius 147.50 feet (delta 46° 20' 26") (chord 116.07 feet) (chord bearing S 23° 01' 35" W) for 119.30 feet to a point of tangency; thence run S 00° 08' 38" E for 79.75 feet to a point of curvature; thence run Southeasterly along the arc of a curve to the left of radius 222.50 feet (delta 24° 26' 55") (chord 94.22 feet) (chord bearing S 12° 22' 05" E) for 94.94 feet to a point of tangency; thence run S 24° 35' 33" E for 68.22 feet to the Point of Beginning.

Bearings hereinabove mentioned are based on the West line of Tract "A" of Bonita Bay Unit Twenty as being S 04° 45' 00" E.

OR2801 PG0971

W. Britt Pomeroy, Jr. (For The Firm)
Professional Land Surveyor
Florida Certificate No. 4448

WBP/kc
20965h

JOHNSON ENGINEERING, INC.
ENGINEERS. SURVEYORS AND ECOLOGISTS

FORT MYERS
NAPLES
PORT CHARLOTTE

2158 JOHNSON STREET
TELEPHONE (941) 334-0046
TELECOPIER (941) 334-3661
POST OFFICE BOX 1550
FORT MYERS, FLORIDA
33902-1550

CARL E. JOHNSON
1911-1968

April 23, 1996

DESCRIPTION
UTILITY & DRAINAGE EASEMENT
WITHIN PARCEL 3
PROPOSED BONITA BAY UNIT THIRTY-SEVEN
SECTIONS 29 & 32, T. 47 S., R. 25 E.
LEE COUNTY, FLORIDA
TRACT 7

A tract or parcel of land for Utility and Drainage Easement purposes lying in Parcel 3 in proposed Bonita Bay Unit Thirty-Seven in Sections 29 and 32, Township 47 South, Range 25 East, Lee County, Florida which tract or parcel is described as follows:

From the Southwest corner of Tract "A", Bonita Bay Unit Twenty, Plat Book 51 at Page 43, Lee County Records run S 04° 45' 00" E for 55.14 feet; thence run the following courses: N 89° 30' 00" E for 337.41 feet; N 67° 46' 40" E for 60.00 feet; N 88° 46' 23" E for 39.58 feet; N 38° 24' 14" E for 104.46 feet; N 01° 00' 00" E for 65.65 feet and S 89° 00' 00" E for 71.99 feet; thence run S 02° 34' 58" E for 249.49 feet to the Point of Beginning of the herein described parcel.

From said Point of Beginning continue S 02° 34' 58" E for 45.00 feet; thence run Easterly along the arc of a curve to the right of radius 727.50 feet (delta 08° 20' 56") (chord 105.91 feet) (chord bearing S 89° 16' 06" E) for 106.01 feet to a point of tangency; thence run S 85° 05' 38" E for 224.49 feet to a point of curvature; thence run Easterly and Northeasterly along the arc of a curve to the left of radius 167.50 feet (delta 56° 57' 16") (chord 159.73 feet) (chord bearing N 66° 25' 44" E) for 166.50 feet to a point of compound curvature; thence run Northeasterly along the arc of a curve to the left of radius 837.08 feet (delta 07° 12' 29") (chord 105.24 feet) (chord bearing N 34° 20' 51" E) for 105.31 feet to a point of compound curvature; thence run Northeasterly along the arc of a curve to the right of radius 322.50 feet (delta 23° 28' 47") (chord 131.24 feet) (chord bearing N 19° 00' 13" E) for 132.16 feet to a point of reverse curvature; thence run Northeasterly along the arc of a curve to the right of radius 87.50 feet (delta 40° 27' 33") (chord 60.51 feet) (chord bearing N 27° 29' 36" E) for 61.79 feet to a point of reverse curvature; thence run Northeasterly, Northerly, Northwesterly, Westerly, Southwesterly, Southerly and Southeasterly along the arc of a curve to the left of radius 57.50 feet (delta 261° 18' 46") (chord 87.24 feet) (chord bearing N 82° 56' 00" W for 262.24 feet to a point of reverse curvature; thence run Southeasterly and Southerly along the arc of a curve to the right of radius 87.50 feet (delta 41° 04' 54") (chord 61.40 feet) (chord bearing S 13° 02' 56" E) for 62.74 feet to a point of

OR2801 PG0972

CHAIRMAN
ARCHIE T. GRANT, JR.

PRESIDENT
FORREST H. BANKS

JOSEPH W. EBNER
STEVEN K. MORRISON
ANDREW D. TILTON
JEFFREY C. COONER
CARL A. BARRACO
KENTON R. KEILING
W. DAVID KEY, JR.
W. BRITT POMEROY
DAN W. DICKEY
KEVIN M. WINTER
GARY R. BULL

ASSOCIATES
GEORGE J. KALAL
STEPHEN W. ADAMS
PATRICIA H. NEWTON

CONSULTANT
LESTER L. BULSON

compound curvature; thence run Southwesterly along the arc of a curve to the right of radius 277.50 feet (delta 23° 15' 06") (chord 111.84 feet) (chord bearing S 19° 07' 04" W) for 112.61 feet to a point of compound curvature; thence run Southwesterly along the arc of a curve to the right of radius 792.08 feet (delta 07° 12' 29") (chord 99.58 feet) (chord bearing S 34° 20' 51" W) for 99.65 feet to a point of compound curvature; thence run Southwesterly and Westerly along the arc of a curve to the right of radius 122.50 feet (delta 56° 57' 16") (chord 116.82 feet) (chord bearing S 66° 25' 44" W) for 121.77 feet to a point of tangency; thence run N 85° 05' 38" W for 224.49 feet to a point of curvature; thence run Westerly along the arc of a curve to the left of radius 772.50 feet (delta 08° 17' 56") (chord 111.79 feet) (chord bearing N 89° 14' 36" W) for 111.89 feet to the Point of Beginning.

Bearings hereinabove mentioned are based on the West line of Tract "A" of Bonita Bay Unit Twenty as being S 04° 45' 00" E.

OR2801 PG0973

W. Britt Pomeroy, Jr. (For The Firm)
Professional Land Surveyor
Florida Certificate No. 4448

WBP/kc
20965q

LEGAL DESCRIPTION
BAY POINTE AT BONITA BAY, A CONDOMINIUM
TRACT 8
(LAKE)

A portion of Sections 29 and 32 , Township 47 South, Range 25 East, Lee County, Florida being more particularly described as follows:

Commence at the Northeast corner of "Bonita Bay Unit Thirty-One, Phase I", as shown in the Public Records of Lee County, Florida, in Plat Book 56, Page 9; thence N09°50'32"W a distance of 973.61 feet to the **Point of Beginning**; thence N02°34'58"W a distance of 142.63 feet; thence N89°00'00"W a distance of 71.99 feet; thence S01°00'00"W a distance of 65.65 feet; thence S38°24'14"W a distance of 72.81 feet; thence S44°55'47"E a distance of 13.74 feet; thence S71°29'48"E a distance of 25.52 feet; thence N84°12'32"E a distance of 27.25 feet; thence S86°41'35"E a distance of 21.85 feet; thence S77°46'24"E a distance of 13.52 feet; thence S85°37'31"E a distance of 23.92 feet; thence S89°37'32"E a distance of 4.88 feet to the **Point of Beginning**.

Containing 12487.400 square feet, more or less.

OR2801 PG0974

LEGAL DESCRIPTION
BAY POINTE AT BONITA BAY, A CONDOMINIUM
TRACT 9
(LAKE)

A portion of Sections 29 and 32 , Township 47 South, Range 25 East, Lee County, Florida being more particularly described as follows:

Commence at the Northeast corner of "Bonita Bay Unit Thirty-One, Phase I", as shown in the Public Records of Lee County, Florida, in Plat Book 56, Page 9; thence N09°50'32"W a distance of 973.61 feet to the **Point of Beginning**; thence S89°37'32"E a distance of 16.15 feet; thence S89°10'54"E a distance of 19.74 feet; thence S85°22'55"E a distance of 18.03 feet; thence S83°27'49"E a distance of 23.81 feet; thence S84°51'12"E a distance of 22.43 feet; thence N88°36'30"E a distance of 19.28 feet; thence S58°44'00"E a distance of 6.09 feet; thence S85°05'38"E a distance of 92.78 feet; thence N71°13'16"E a distance of 8.70 feet; thence N72°08'49"E a distance of 20.39 feet; thence N73°17'37"E a distance of 15.95 feet; thence N85°29'22"E a distance of 19.73 feet; thence N84°13'43"E a distance of 19.47 feet; thence N87°56'41"E a distance of 22.61 feet; thence N67°18'49"E a distance of 21.46 feet; thence N49°10'35"E a distance of 19.03 feet; thence N30°29'41"E a distance of 21.27 feet; thence N27°26'42"E a distance of 20.87 feet; thence N36°48'42"E a distance of 44.36 feet to a point of curvature of a tangent circular curve concave to the west; thence northerly along the arc of said curve, having for its elements, a radius of 70.00 feet, a central angle of 86°12'21", a chord distance of 95.66 feet, a chord bearing of N06°17'29"W, an arc distance of 105.32 feet to a point of reverse curvature of a tangent circular curve concave to the northeast; thence northwesterly along the arc of said curve, having for its elements, a radius of 5.00 feet, a central angle of 42°40'18", a chord distance of 3.64 feet, a chord bearing of N28°03'30"W, an arc distance of 3.72 feet to a point of tangency; thence N06°43'21"W a distance of 54.50 feet; thence N47°49'02"W a distance of 34.75 feet to a point on the arc of a non-tangent circular curve concave to the southeast; thence southwesterly along the arc of said curve, having for its elements, a radius of 112.25 feet, a central angle of 06°11'04", a chord distance of 12.11 feet, a chord bearing of S39°05'32"W, an arc distance of 12.12 feet to a point of tangency; thence S36°00'00"W a distance of 151.29 feet; thence N89°00'00"W a distance of 268.10 feet; thence S02°34'58"E a distance of 142.63 feet to the **Point of Beginning**.

Containing 66894.280 square feet, more or less.

OR2801 PG0975

LEGAL DESCRIPTION
BAY POINTE AT BONITA BAY, A CONDOMINIUM
TRACT 10
(COMMON AREA)

A portion of Sections 29 and 32 , Township 47 South, Range 25 East, Lee County, Florida being more particularly described as follows:

Commence at the Northeast corner of "Bonita Bay Unit Thirty-One, Phase I", as shown in the Public Records of Lee County, Florida, in Plat Book 56, Page 9; thence N15°39'33"E a distance of 685.69 feet to the **Point of Beginning**; thence N04°54'22"E a distance of 127.05 feet to a point on the arc of a non-tangent circular curve concave to the northwest; thence northeasterly along the arc of said curve, having for its elements, a radius of 167.50 feet, a central angle of 48°04'07", a chord distance of 136.44 feet, a chord bearing of N61°59'10"E, an arc distance of 140.52 feet to a point of compound curvature of a tangent circular curve concave to the northwest; thence northeasterly along the arc of said curve, having for its elements, a radius of 837.08 feet, a central angle of 07°12'29", a chord distance of 105.24 feet, a chord bearing of N34°20'52"E, an arc distance of 105.31 feet to a point of compound curvature of a tangent circular curve concave to the northwest; thence northeasterly along the arc of said curve, having for its elements, a radius of 322.50 feet, a central angle of 23°28'47", a chord distance of 131.24 feet, a chord bearing of N19°00'14"E, an arc distance of 132.16 feet to a point of reverse curvature of a tangent circular curve concave to the southeast; thence northeasterly along the arc of said curve, having for its elements, a radius of 87.50 feet, a central angle of 40°27'33", a chord distance of 60.51 feet, a chord bearing of N27°29'37"E, an arc distance of 61.79 feet to a point of reverse curvature of a tangent circular curve concave to the southwest; thence northwesterly along the arc of said curve, having for its elements, a radius of 57.50 feet, a central angle of 120°08'29", a chord distance of 99.66 feet, a chord bearing of N12°20'51"W, an arc distance of 120.57 feet; thence N17°34'55"E a distance of 5.13 feet; thence S81°15'00"E a distance of 57.20 feet to a point on the arc of a non-tangent circular curve concave to the northwest; thence southwesterly along the arc of said curve, having for its elements, a radius of 841.58 feet, a central angle of 27°31'31", a chord distance of 400.42 feet, a chord bearing of S24°29'15"W, an arc distance of 404.30 feet to a point of tangency; thence S38°15'00"W a distance of 84.23 feet to a point of curvature of a tangent circular curve concave to the southeast; thence southwesterly along the arc of said curve, having for its elements, a radius of 980.58 feet, a central angle of 08°21'10", a chord distance of 142.83 feet, a chord bearing of S34°04'25"W, an arc distance of 142.95 feet to the **Point of Beginning**; (the preceding three (3) courses being coincidental with the Westerly Right-of-Way line of Bonita Bay Boulevard).

LESS AND EXCEPT: Tract C as set forth on the plat of "Bonita Bay Unit Thirty - Seven", recorded in Plat Book 59 , Pages57 and58 of the Public Records of Lee County, Florida.

Containing 9400.421 square feet, more or less.

OR2801 PG0976

State of Florida

Department of State

OR2801 PG0977

I certify the attached is a true and correct copy of the Articles of Incorporation of BAY POINTE AT BONITA BAY CONDOMINIUM ASSOCIATION, INC., a Florida corporation, filed on February 27, 1997, as shown by the records of this office.

I further certify the document was electronically received under FAX audit number H97000003369. This certificate is issued in accordance with section 15.16, Florida Statutes, and authenticated by the code noted below.

The document number of this corporation is N97000001118.

Given under my hand and the
Great Seal of the State of Florida,
at Tallahassee, the Capital, this the
Twenty-seventh day of February, 1997

Authentication Code: 697A00010428-022797-N97000001118-1/1

GREAT SEAL OF THE STATE OF FLORIDA · IN GOD WE TRUST ·

Sandra B. Mortham

Sandra B. Mortham
Secretary of State

CR2EO22 (1-95)

ARTICLES OF INCORPORATION
OF
BAY POINTE AT BONITA BAY CONDOMINIUM ASSOCIATION, INC.
(A Florida Corporation Not for Profit)

OR2801 PG0978

In order to form a corporation not for profit, under and in accordance with Chapter 617 of the Florida Statutes, I, the undersigned, hereby incorporate this corporation not for profit, for the purposes and with the powers hereinafter set forth and to that end, I do, by these Articles of Incorporation, certify as follows:

The terms contained in these "Articles" are defined in the Condominium Act, Chapter 718, Florida Statutes, 1995 ("Act") as amended through the date of recording the first Declaration amongst the Public Records of Lee County, Florida, shall have the meaning of such terms set forth in such Act, and, for clarification, the following terms will have the following meanings:

A. "Act" means Condominium Act, Chapter 718, Florida Statutes, 1995, as amended through the date of recording the first Declaration amongst the Public Records.

B. "Additional Owner" or "Declarant" means Bonita Bay Properties, Inc., a Florida corporation and all of such entities' successors and assigns. Developer is purchasing the "Land" (as such term is defined in the Declaration) from Additional Owner in three stages. Developer as of the date of filing these Articles has closed on the first stage. Notwithstanding the foregoing, a Home Owner shall not, solely by the purchase of a Home, be deemed a successor or assign of Additional Owner. In addition, if any person obtains title to all or any portion of the Land then owned by Additional Owner as a result of a foreclosure of any mortgage or deed in lieu thereof, such person may elect to become the Additional Owner by a written election recorded in the Public Records of the County, and regardless of such election, such person may appoint as Additional Owner any third party who acquires title to all or any portion of the Land owned by Bonita Bay Properties, Inc., by a written appointment instrument recorded in the Public Records of the County. Any subsequent Additional Owner shall not be liable for any default or obligations incurred by any prior Additional Owner or Developer hereunder, except as same may be expressly assumed by the subsequent Additional Owner.

C. "Articles" means these Articles of Incorporation of the Association.

D. "Association" means Bay Pointe at Bonita Bay Condominium Association, Inc., a Florida corporation not for profit, responsible for operating Bay Pointe at Bonita Bay, a Condominium, and any other Bay Pointe at Bonita Bay Condominium(s) which may be developed.

E. "Bay Pointe at Bonita Bay" initially means the initial section within Bay Pointe at Bonita Bay upon which Developer intends to develop the Condominium; however, Developer and Additional Owner have reserved the right to develop additional condominium developments and/or non-condominium developments in the overall proposed Bay Pointe at Bonita Bay.

F. "Bay Pointe at Bonita Bay, a Condominium" means the initial condominium in Bay Pointe at Bonita Bay which is the subject of a Declaration.

G. "Bay Pointe at Bonita Bay Condominium(s)" means the condominium or condominiums in Bay Pointe at Bonita Bay which are the subject of a Declaration, including, but not limited to, Bay Pointe at Bonita Bay, a Condominium.

H. "Board" means the Board of Directors of the Association.

I. "Bonita Bay" means the name given to the planned development in which the Condominium is located and which is more particularly described in the Declaration.

Prepared by: Mary A. Marnell, Esq., FL Bar #0878431
Ruden, McClosky, et al., 5811 Pelican Bay Blvd.
Naples, Florida 34108
(941) 566-7108

J. "Bylaws" means the Bylaws of the Association.

K. "Common Elements" means the portion of the Condominium Property not included in the Homes.

L. "Common Surplus" means the excess of receipts of the Association collected on behalf of Bay Pointe at Bonita Bay Condominium(s) (including, but not limited to, assessments, rents, profits and revenues, on account of the Common Elements) over the Common Expenses.

M. "Condominium" means that portion of the real property and improvements thereon which is submitted to condominium ownership by the recording of the Declaration of Condominium of Bay Pointe at Bonita Bay, a Condominium or amendment thereto adding a subsequent phase pursuant to Section 718.403 of the Act.

N. "Condominium Property" means the real property submitted to condominium ownership pursuant to a Declaration and any amendment or amendments thereto and all improvements thereon, subject to any and all easements associated therewith, including, but not limited to, the Homes and Common Elements and all easements intended for use in connection with Bay Pointe at Bonita Bay Condominium, all as more particularly described in each Declaration.

O. "County" means Lee County, Florida.

P. "Declaration" means a Declaration of Condominium by which a Bay Pointe at Bonita Bay Condominium is submitted by Developer to the condominium form of ownership in accordance with the Act.

Q. "Developer" means Centex Real Estate Corporation, a Nevada corporation, its successors, grantees and assigns. An Owner shall not, solely by the purchase of a Home, be deemed a successor or assign of Developer or of the rights of Developer under the Neighborhood Documents unless such Owner is specifically so designated as a successor or assign of such rights in the instrument of conveyance or any other instrument executed by Developer.

R. "Director" means a member of the Board.

S. "Home" means "unit" as described in the Act and is that portion of the Condominium Property which is subject to exclusive ownership.

T. "Home Owner" means "unit owner" as defined in the Act and is the owner of a Home.

U. "Member" means a member or members of the Association.

V. "Neighborhood Assessments" means the share of funds required for the payment of "Annual Assessments" and "Special Assessments" (as such terms are defined in each Declaration) which from time to time are assessed against an Owner.

W. "Neighborhood Common Expenses" means expenses for which the Owners are liable to the Association as set forth in various sections of the Act and as described in the Neighborhood Documents and include:

(i) expenses incurred in connection with operation, maintenance, repair or replacement of the "Common Elements" (as defined in each Declaration), costs of carrying out the powers and duties of the Association with respect to Bay Pointe at Bonita Bay Condominium(s) and the Condominium Property of

OR2801 PG0979

Prepared by: Mary A. Marnell, Esq., FL Bar #0878431
Ruden, McClosky, et al., 5811 Pelican Bay Blvd.
Naples, Florida 34108
(941) 566-7108

each, cost of fire and extended coverage insurance on the Condominium Property; and

(ii) any other expenses designated as Neighborhood Common Expenses from time to time by the Board.

X. "Neighborhood Documents" means in the aggregate each Declaration, these Articles, the Bylaws, any rules or regulations promulgated by the Association and all of the instruments and documents referred to therein and executed in connection with a Bay Pointe at Bonita Bay Condominium.

Y. "Phase" means those portions of the real property within Bay Pointe at Bonita Bay and improvements thereon which, as contemplated by Section 718.403 of the Act, may become part of the Condominium Property of a Bay Pointe at Bonita Bay Condominium by the recording of a Declaration or an amendment thereto.

Z. "Public Records" means the Public Records of the County.

AA. "Voting Certificate" means "voting certificate" as defined in the Act and is the document which designates one (1) of the record title owners, or the corporate, partnership or entity representative who is authorized to vote on behalf of a Home owned by more than one (1) owner or by any entity.

BB. "Voting Interests" means "voting interests" as defined in the Act and are the voting rights distributed to Members pursuant to a Declaration.

ARTICLE I
NAME

The name of this Association shall be BAY POINTE AT BONITA BAY CONDOMINIUM ASSOCIATION, INC., whose principal and mailing address is 4700 Montego Pointe Way, Bonita Springs, Florida 34134.

ARTICLE II
PLAN OF DEVELOPMENT AND PURPOSE OF ASSOCIATION

A. Developer intends to develop the Condominium on property Developer owns within Bonita Bay. Developer intends to develop the Condominium as a "phase condominium" as contemplated by Section 718.403 of the Act which is planned to consist of twenty-six (26) Phases. If Developer closes on the remainder of its purchase of the Land from Additional Owner and submits all twenty-six (26) Phases to condominium ownership as part of the Condominium by recording the Declaration and several amendments thereto amongst the Public Records, then the Condominium shall be the only condominium in Bay Pointe at Bonita Bay and shall be the only condominium administered by the Association.

B. If Developer does not submit all twenty-six (26) Phases to condominium ownership as part of the Condominium, Developer may submit the land in Bay Pointe at Bonita Bay not included in the Condominium to condominium ownership as one (1) or more additional Bay Pointe at Bonita Bay Condominiums to be administered by the Association.

C. If Developer does not close on the purchase of remaining portions of the Land in accordance with the Contract, Additional Owner may submit the land in Bay Pointe at Bonita Bay not included in the Condominium to condominium ownership as one (1) or more additional Bay Pointe at Bonita Bay Condominiums to be administered by the Association.

Prepared by: Mary A. Marnell, Esq., FL Bar #0878431
Ruden, McClosky, et al., 5811 Pelican Bay Blvd.
Naples, Florida 34108
(941) 566-7108

D. All or any portion of Bay Pointe at Bonita Bay not included in Bay Pointe at Bonita Bay Condominium may be developed with residential housing units either as a condominium which is not a Bay Pointe at Bonita Bay Condominium, and thus would not be administered by the Association, or as a non-condominium development, such as non-condominium townhouses, rental housing or cooperatively owned housing, etc.

OR2801 PG0981

E. 1. The Association shall be the condominium association responsible for the operation of each Bay Pointe at Bonita Bay Condominium subject to the terms and restrictions of the Neighborhood Documents; however, Developer reserves the right to incorporate additional association(s) if more than one (1) Bay Pointe at Bonita Bay Condominium is created. Each Home Owner shall be a Member of the Association as provided in these Articles.

2. The purpose for which this Association is organized is to maintain, operate and manage Bay Pointe at Bonita Bay, including the Condominium Property; to own portions of, operate, lease, sell, trade and otherwise deal with Bay Pointe at Bonita Bay and certain of the improvements located therein now or in the future, all in accordance with the plan set forth in the Neighborhood Documents and all other lawful purposes.

ARTICLE III
POWERS

The Association shall have the following powers which shall be governed by the following provisions:

A. The Association shall have all of the common law and statutory powers of a corporation not for profit, which are not in conflict with the terms of the Neighborhood Documents or the Act.

B. The Association shall have all of the powers to be granted to the Association in the Neighborhood Documents. All provisions of the Declaration and Bylaws which grant powers to the Association are incorporated into these Articles, including, but not limited to, the promulgation and enforcement of rules and regulations.

C. The Association shall have all of the powers of a condominium association under the Act and shall have all of the powers reasonably necessary to implement the purposes of the Association including, but not limited to, the following:

1. To make, establish and enforce reasonable rules and regulations governing the use of the Condominium Property (including the Homes and the Common Elements);

2. To make, levy, collect and enforce Neighborhood Assessments and special charges and any other charges and/or fees as provided in the Neighborhood Documents against Home Owners, in order to provide funds to pay for the expenses of the Association, the maintenance, operation and management of Bay Pointe at Bonita Bay and the payment of Neighborhood Common Expenses and other expenses in the manner provided in the Neighborhood Documents and the Act and to use and expend the proceeds of such Neighborhood Assessments in the exercise of the powers and duties of the Association;

3. To maintain, repair, replace and operate the Condominium Property in accordance with the applicable Declaration and the Act;

4. To reconstruct improvements on the Condominium Property in the event of casualty or other loss;

Prepared by: Mary A. Marnell, Esq., FL Bar #0878431
Ruden, McClosky, et al., 5811 Pelican Bay Blvd.
Naples, Florida 34108
(941) 566-7108

5. To enforce by legal means the provisions of the Neighborhood Documents and the Act;

6. To employ personnel, retain independent contractors and professional personnel, and to enter into service contracts to provide for the maintenance, operation and management of the Condominium Property and to enter into any other agreements consistent with the purposes of the Association including, but not limited to, agreements as to the management of the Condominium Property and agreements to acquire possessory or use interests in real property and to provide therein that the expenses of said real property and any improvements thereon, including taxes, insurance, utility expenses, maintenance and repairs, are Neighborhood Common Expenses of the Bay Pointe at Bonita Bay Condominiums, and as to the installation, maintenance and operation of a "master" television antenna system and a cable television system;

OR2801 PG0982

7. To elect as the "Voting Member", as defined in the Community Declaration, the President of the Association. The next most senior official of the Association shall be the alternate Voting Member. The Voting Member shall cast the votes in the Community Association of all of the Home Owners on their behalf. The Voting Member may cast all such votes as he, in his or her sole discretion, deems appropriate; and

8. To purchase: (i) Home(s) upon which the Association has chosen to exercise any right of first refusal it may have and to obtain such financing as is necessary to effectuate the same; and (ii) other real and/or personal property as determined by the Association in compliance with the Neighborhood Documents.

ARTICLE IV
MEMBERS

The qualification of Members of the Association, the manner of their admission to membership, the manner of the termination of such Membership, and the manner of voting by Members shall be as follows:

A. Until such time as Bay Pointe at Bonita Bay, a Condominium is submitted to condominium ownership by the recordation of the Declaration, the membership of this Association shall be comprised solely of the members of the "First Board" (as defined in Article IX hereof).

B. Once Bay Pointe at Bonita Bay, a Condominium is submitted to condominium ownership by the recordation of the Declaration, the Home Owners, which shall mean in the first instance Developer as the owner of all the Homes, shall be entitled to exercise all of the rights and privileges of Members.

C. Except as set forth above, membership in the Association shall be established by the acquisition of ownership of fee title to a Home as evidenced by the recording of a deed or other instrument of conveyance amongst the Public Records, whereupon the membership of the prior owner shall terminate as to that Home. Where title to a Home is acquired from a party other than Developer, the person, persons, corporation or other legal entity thereby acquiring such Home, shall not be a Member unless and until such acquisition is in compliance with the provisions of the applicable Declaration. New Members shall deliver to the Association a true copy of the deed or other instrument of acquisition of title to the Home.

D. No Member may assign, hypothecate or transfer in any manner his or her membership or his or her share in the funds and assets of the Association except as an appurtenance to his or her Home.

E. If a second Bay Pointe at Bonita Bay Condominium is submitted to condominium ownership, membership in the Association shall be divided into classes ("Class Members") with

Prepared by: Mary A. Marnell, Esq., FL Bar #0878431
Ruden, McClosky, et al., 5811 Pelican Bay Blvd.
Naples, Florida 34108
(941) 566-7108

Home Owners in each Bay Pointe at Bonita Bay Condominium constituting a class, and for so long as Developer owns any Homes (collectively, "Units"), an additional class comprised of those Units owned by Developer shall also exist as a separate class ("Developer Class"). If one or more additional Bay Pointe at Bonita Bay Condominiums are submitted to condominium ownership, the Home Owners thereof who are Members of the Association shall also be Class Members as to each additional condominium. Each class, except the Developer Class, shall be designated by a numeral denoting the sequence in which the Bay Pointe at Bonita Bay Condominium was submitted to condominium ownership. For example, the Home Owners of Bay Pointe at Bonita Bay, a Condominium, provided it is the first Bay Pointe at Bonita Bay Condominium submitted to condominium ownership by recordation of a Declaration, would be "Class 1 Members."

OR2801 PG0983

F. With respect to voting, the following provisions shall apply:

1. Either the membership as a whole shall vote or the Class Members shall vote, which determination shall be made in accordance with subparagraphs F.2 and F.3 immediately below. In any event, however, each Home, including each Home owned by Developer, shall be entitled to only one (1) vote, which vote shall be exercised and cast in accordance with the applicable Declaration(s) and the Neighborhood Documents; provided, however, on such matters requiring a vote of the Developer Class, Homes owned by the Developer shall also have a vote in such class. In the event there is more than one (1) owner with respect to a Home as a result of the fee interest in such Home being held by more than one (1) person or entity, such owners collectively shall be entitled to only one (1) vote in the manner determined by the applicable Declaration.

2. In matters that require a vote, voting shall take place as follows:

(a) Matters substantially pertaining to a particular Bay Pointe at Bonita Bay Condominium or any combination of Bay Pointe at Bonita Bay Condominiums shall be voted upon only by the Class Members of the applicable Bay Pointe at Bonita Bay Condominium(s) and shall be determined by a vote of the majority of such Class Members at any meeting having a proper quorum (as determined in accordance with the Bylaws); and

(b) Matters substantially pertaining to the Association as a whole shall be voted on by the Membership and shall be determined by a vote of the majority of the Membership in attendance at any meeting having a quorum (as determined in accordance with the Bylaws).

3. Any decision as to whether a matter substantially pertains to a particular Bay Pointe at Bonita Bay Condominium or any combination of Bay Pointe at Bonita Bay Condominiums or to the Association as a whole, for purposes of voting, shall be determined solely by the Board. Notwithstanding the foregoing, no action or resolution affecting a Bay Pointe at Bonita Bay Condominium or any combination of Bay Pointe at Bonita Bay Condominiums which the Board determines to require the vote of the Members as a whole shall be effective with regard to a Bay Pointe at Bonita Bay Condominium unless the Class Members of the particular Bay Pointe at Bonita Bay Condominium or any combination of Bay Pointe at Bonita Bay Condominiums so affected shall be given the opportunity to also vote on said action or resolution as a class or classes.

4. The membership shall be entitled to elect the Board as provided in Article IX of these Articles.

ARTICLE V
TERM

The term for which this Association is to exist shall be perpetual.

Prepared by: Mary A. Marnell, Esq., FL Bar #0878431
Ruden, McClosky, et al., 5811 Pelican Bay Blvd.
Naples, Florida 34108
(941) 566-7108

ARTICLE VI
INCORPORATOR

The name and address of the Incorporator of these Articles are as follows: Timothy J. Ruemler, 6702 Lone Oak Boulevard, Naples, Florida 34109.

ARTICLE VII
OFFICERS

A. The affairs of the Association shall be managed by a President, one (1) or several Vice Presidents, a Secretary and a Treasurer and, if elected by the Board, an Assistant Secretary and an Assistant Treasurer, which officers shall be subject to the directions of the Board. The Board may employ a managing agent and/or such other managerial and supervisory personnel or entities as it deems necessary to administer or assist in the administration of the operation or management of the Association and Developer shall have the right to be reimbursed for expenses incurred by Developer on behalf of the Association in managing the Association.

B. The Board shall elect the President, the Vice President, the Secretary, and the Treasurer, and as many other Vice Presidents, Assistant Secretaries and Assistant Treasurers as the Board shall from time to time determine appropriate. Such officers shall be elected annually by the Board at the first meeting of the Board following the "Annual Members' Meeting" (as described in Section 4.1 of the Bylaws); provided, however, such officers may be removed by such Board and other persons may be elected by the Board as such officers in the manner provided in the Bylaws. The President shall be a Director of the Association, but no other officer need be a Director. The same person may hold two (2) offices, the duties of which are not incompatible; provided, however, the offices of President and Vice President shall not be held by the same person, nor shall the same person hold the office of President who holds the office of Secretary or Assistant Secretary.

ARTICLE VIII
FIRST OFFICERS

The names of the officers who are to serve until the first election of officers by the Board are as follows:

President	Diana Fliss
Vice President	Steve Peel
Secretary	Mike McLeod
Treasurer	Mike McLeod

ARTICLE IX
BOARD OF DIRECTORS

A. The number of Directors on the first Board of Directors ("First Board"), the "Initial Elected Board" (as hereinafter defined) and all Boards elected prior to the "Majority Election Date" (as hereinafter defined) shall be three (3). Provided, however, beginning with such date, there shall also be a Class Director for each additional Bay Pointe at Bonita Bay Condominium and, if necessary, there shall also be an additional Director elected "at large", so that there will always be an odd number of Directors. The number of Directors elected by the Members at and subsequent to the Majority Election Date shall be as provided in Paragraph L of this Article IX. Except for Developer-appointed Directors, Directors must be Members or the spouses, parents or children of Members.

OR2801 PG0984

Prepared by: Mary A. Marnell, Esq., FL Bar #0878431
Ruden, McClosky, et al., 5811 Pelican Bay Blvd.
Naples, Florida 34108
(941) 566-7108

B. The names and addresses of the persons who are to serve as the First Board are as follows:

NAME	ADDRESS
Steve Peel	6702 Lone Oak Boulevard Naples, FL 34109
Michael McLeod	6702 Lone Oak Boulevard Naples, FL 34109
Diana Fliss	6702 Lone Oak Boulevard Naples, FL 34109

OR2801 PG0985

Developer reserves the right to designate successor Directors to serve on the First Board for so long as the First Board is to serve, as hereinafter provided. Developer reserves the right to remove any Director from the First Board and the right to remove any Director designated by Developer in accordance with these Articles.

C. If upon the occurrence of the "Majority Election Date" (as hereinafter defined), more than one (1) Bay Pointe at Bonita Bay Condominium has been submitted to condominium ownership, then a class of Directors ("Class Directors") shall be created for each Bay Pointe at Bonita Bay Condominium in the manner provided for in Paragraph G of this Article IX. Each class shall be designated by a numeral denoting the sequence in which the Bay Pointe at Bonita Bay Condominium was submitted to condominium ownership. For example, the Directors of the Bay Pointe at Bonita Bay Condominium, provided it is the first Bay Pointe at Bonita Bay Condominium submitted to condominium ownership, would be "Class 1 Directors." Each Bay Pointe at Bonita Bay Condominium shall have one Class Director and one or more Director(s) shall be elected "at large," in accordance with Paragraph A of this Article IX.

D. Upon the conveyance by Developer to Owners other than Developer ("Purchaser Members") of fifteen percent (15%) or more of the "Total Homes" (as hereinafter defined) (as evidenced by the recordation of deeds), including Homes located within all Phases of the Bay Pointe at Bonita Bay Condominium as contemplated in the Declaration(s) (provided the Developer still holds the right to submit additional Phases to condominium ownership), the Purchaser Members shall be entitled to elect one-third (1/3) of the Board, which election shall take place at the Initial Election Meeting. Developer shall designate the remaining Directors on the Board at the Initial Election Meeting. The Director to be so elected by the Purchaser Members and the remaining Directors to be designated by Developer are hereinafter collectively referred to as the "Initial Elected Board" and shall succeed the First Board upon their election and qualification. Subject to the provisions of Paragraph IX.E below, the Initial Elected Board shall serve until the next Annual Members' Meeting, whereupon, the Directors shall be designated and elected in the same manner as the Initial Elected Board. The Directors shall continue to be so designated and elected at each subsequent Annual Members' Meeting until such time as the Purchaser Members are entitled to elect not less than a majority of the Directors on the Board. Developer reserves the right, until such time as the Purchaser Members are entitled to elect not less than a majority of the Directors on the Board, to designate successor Directors to fill any vacancies caused by the resignation or removal of Directors designated by Developer pursuant to this Paragraph IX.D.

The term "Total Homes" means the number of Homes contemplated for all Bay Pointe at Bonita Bay Condominium (less the number of Homes in any and all Phases of any Bay Pointe at Bonita Bay Condominium developed as a phase condominium pursuant to the Act, which Developer decides neither to submit as part of such Bay Pointe at Bonita Bay Condominium as provided in the applicable Declaration nor submit to condominium ownership as a separate Bay Pointe at Bonita Bay Condominium).

Prepared by: Mary A. Marnell, Esq., FL Bar #0878431
Ruden, McClosky, et al., 5811 Pelican Bay Blvd.
Naples, Florida 34108
(941) 566-7108

E. Purchaser Members are entitled to elect not less than a majority of the Board upon the happening of any of the following events, whichever shall first occur:

1. Three (3) years after sales by Developer of fifty percent (50%) of the sum of the Total Homes in Bay Pointe at Bonita Bay Condominiums have been "Closed" (as hereinafter defined); or

2. Three (3) months after sales by Developer of ninety percent (90%) of the Total Homes in Bay Pointe at Bonita Bay Condominiums have been Closed; or

3. Five (5) years after the sale by Developer of the first Home has been Closed; or

4. When all of the Total Homes in Bay Pointe at Bonita Bay Condominiums have been completed (as evidenced by the issuance of Certificates of Occupancy for all of same) and some have been sold to Purchaser Members and none of the others are being offered for sale by Developer in the ordinary course of business; or

5. When some of the Total Homes in Bay Pointe at Bonita Bay Condominiums have been conveyed to Purchaser Members and none of the others are being constructed or offered for sale by Developer in the ordinary course of business; or

6. Seven (7) years after the recordation of the first Declaration; or

7. When Developer, as Developer has the right to do at any time upon written notice to the Association, relinquishes its right to designate a majority of the Board.

The term "Closed" shall mean the recording of a deed or other instrument of conveyance to a Purchaser Member amongst the Public Records.

F. The election of not less than a majority of Directors by the Purchaser Members shall occur on a date to be called by the Board for such purpose ("Majority Election Date").

G. On the Majority Election Date, each class of Purchaser Members shall elect one (1) Director and Developer, until the Developer's Resignation Event, shall be entitled to designate one (1) Director. All of the Purchaser Members shall also elect one or more Directors-at-large in accordance with Article IX.A. herein, if applicable. Developer reserves the right, until the Developer's Resignation Event, to name the successor, if any, to any Director it has so designated; provided, however, Developer shall in any event be entitled to exercise any right it may have to representation on the Board as granted by law, notwithstanding the occurrence of the Developer's Resignation Event.

H. At the first Annual Members Meeting held after the Majority Election Date, a "staggered" term of office of the Board shall be created as follows:

1. a number equal to fifty percent (50%) of the total number of Directors rounded to the nearest or next whole number is the number of Directors whose term of office shall be established at two (2) years and the Directors serving for a two (2) year term will be the Directors receiving the most votes at the meeting; and

2. the remaining Directors' terms of office shall be established at one (1) year.

At each Annual Members Meeting thereafter, as many Directors of the Association shall be elected as there are Directors whose regular term of office expires at such time, and the term of office of the Directors so elected shall be for two (2) years, expiring when their successors are duly elected and qualified.

OR2801 PG0986

Prepared by: Mary A. Marnell, Esq., FL Bar #0878431
Ruden, McClosky, et al., 5811 Pelican Bay Blvd.
Naples, Florida 34108
(941) 566-7108

I. The Board shall continue to be elected by the Members subject to Developer's right to appoint a member to the Board as specified in the Act at each subsequent Annual Members' Meeting, until Developer is no longer entitled to appoint a member to the Board.

J. The Initial Election Meeting and the Majority Election Date shall be called by the Association, through its Board, within ninety (90) days after the Purchaser Members are entitled to elect a Director or the majority of Directors, as the case may be. A notice of the election shall be forwarded to all Members in accordance with the Bylaws; provided, however, that the Members shall be given at least sixty (60) days' notice of such election. The notice shall also specify the number of Directors that shall be elected by the Purchaser Members and the remaining number of Directors designated by Developer.

OR2801 PG0987

K. Developer shall cause all of its designated Directors to resign when Developer no longer holds at least five percent (5%) of the sum of the Total Homes in all Bay Pointe at Bonita Bay Condominiums for sale in the ordinary course of business. In addition, Developer may at any time, in its sole discretion, cause the voluntary resignation of all of the Directors designated by it. The happening of either such event is herein referred to as the "Developer's Resignation Event". Upon the Developer's Resignation Event, the Directors elected by Members shall elect successor Directors to fill the vacancies caused by the resignation or removal of the Developer's designated Directors. These successor Directors shall serve until the next Annual Members' Meeting and until their successors are elected and qualified; provided, however, nothing herein contained shall be deemed to waive any right to representation on the Board which Developer may have pursuant to the Act. Developer specifically reserves the right to assert any right to representation on the Board it may have pursuant to the Act, notwithstanding that the Developer's Resignation Event may have previously occurred.

L. At each Annual Members' Meeting held subsequent to the year in which the Majority Election Date occurs, the number of Directors to be elected shall be determined by the Board from time to time, but there shall not be less than three (3) Directors. In the event, however, there are two (2) or more Bay Pointe at Bonita Bay Condominiums, then the number of Directors shall be one (1) from each Class and one (1) Director elected at large, at a minimum.

M. The following provisions shall govern the right of each Director to vote and the manner of exercising such right:

1. There shall be only one (1) vote for each Director.

2. All of the Directors of the Board shall vote thereon as one (1) body, without distinction as to class, on matters which pertain to the Association or all of the Bay Pointe at Bonita Bay Condominiums.

3. On matters pertaining exclusively to a particular Bay Pointe at Bonita Bay Condominium(s), only the affected Class Directors shall vote thereon.

4. Subject to the provisions of Subparagraphs 1, 2 and 3 immediately preceding, the Board as a whole shall determine whether a matter is subject to a vote of the Directors, shall be voted on by Class Directors or by the entire Board as a whole. In the case of deadlock by the Board, application shall be made to a court of competent jurisdiction to resolve the deadlock.

5. In the determination of whether a quorum exists or whether the Board has duly acted with respect to any matter, (a) on matters which are voted on by the Board as a whole, such determination shall be made with respect to the number of all of the Directors; and (b) on matters which are voted on by Class Directors, such determination shall be made with respect to the number of Class Directors.

Prepared by: Mary A. Marnell, Esq., FL Bar #0878431
Ruden, McClosky, et al., 5811 Pelican Bay Blvd.
Naples, Florida 34108
(941) 566-7108

ARTICLE X
POWERS AND DUTIES OF THE BOARD OF DIRECTORS

All of the powers and duties of the Association shall be exercised by the Board in accordance with the provisions of the Act and the Neighborhood Documents, where applicable, and shall include, but not be limited to, the following:

OR2801 PG0988

A. Making and collecting Neighborhood Assessments against Members to defray the costs of the Neighborhood Common Expenses; collecting that portion of Common Expenses attributable to Home Owners in Bay Pointe at Bonita Bay as determined in accordance with the Community Declaration; and collecting charges for Cable Expenses as determined in accordance with the Cable Television Agreement, as such agreement is described in each Declaration.

B. Using the proceeds of Neighborhood Assessments in the exercise of the powers and duties of the Association and the Board.

C. Maintaining, repairing and operating the improvements within the Bay Pointe at Bonita Bay Condominium(s).

D. Reconstructing improvements after casualties and losses and making further authorized improvements within the Bay Pointe at Bonita Bay Condominium(s).

E. Making and amending rules and regulations with respect to the Bay Pointe at Bonita Bay Condominium(s).

F. Enforcing by legal means the provisions of the Neighborhood Documents.

G. Contracting for the management and maintenance of the Condominium Property and authorizing a management agent to assist the Association in carrying out its powers and duties by performing such functions as the submission of proposals, collection of Neighborhood Assessments, preparation of records, enforcement of rules and maintenance, repair and replacement of improvements or portions thereof for which the Association has such responsibility and other services with funds that shall be made available by the Association for such purposes and terminating such contracts and authorizations. The Association and its officers shall, however, retain at all times the powers and duties granted by the Neighborhood Documents and the Act including, but not limited to, the making of Neighborhood Assessments, promulgation of rules and regulations and execution of contracts on behalf of the Association.

H. Paying taxes and Neighborhood Assessments which are or may become liens against the Common Elements of the Bay Pointe at Bonita Bay Condominium(s) or against Association Property and assessing the same against Homes, the Owners of which are responsible for the payment thereof.

I. Purchasing and carrying insurance for the protection of Members and the Association against casualty and liability in accordance with the Act and the Neighborhood Documents and acquiring one insurance policy to insure the Condominium Property of all Bay Pointe at Bonita Bay Condominiums and to allocate the premiums therefor in a fair and equitable manner.

J. Paying costs of all power, water, sewer and other utility services rendered to the Condominium Property of each of the Bay Pointe at Bonita Bay Condominiums and not billed directly to Owners of the individual Homes.

K. Hiring and retaining such employees as are necessary to administer and carry out the services required for the proper administration and purposes of this Association and paying all salaries therefor.

Prepared by: Mary A. Marnell, Esq., FL Bar #0878431
Ruden, McClosky, et al., 5811 Pelican Bay Blvd.
Naples, Florida 34108
(941) 566-7108

L. Approving or disapproving of proposed purchasers of Homes by gift, devise, or inheritance and other transferees and approving or disapproving of proposed lessees of Homes in accordance with the provisions set forth in the Neighborhood Documents and the Act and collecting the highest fee allowed by the Act therefor.

M. Engaging in mandatory non-binding arbitration as provided for in Section 718.112(2)(a)2 of the Act for the settlement of disputes as provided for in Section 718.1255 of the Act. The provisions of Sections 718.112(2)(a)2 and 718.1255 are incorporated by reference herein.

OR2801 PG0989

N. Preparing a question and answer sheet, if and as required by the Act and the rules promulgated in the Florida Administrative Code by the Division of Florida Land Sales, Condominiums and Mobile Homes, and updating the question and answer sheet at least annually.

O. Maintaining an adequate number of copies of the Neighborhood Documents, as well as the question and answer sheet referred to in Paragraph X.N. above, on the Condominium Property to ensure their availability to Home Owners and prospective purchasers. The Association may charge its actual costs for preparing and furnishing the foregoing to those requesting same.

P. Ensuring that the following contracts shall be in writing:

(i) Any contract for the purchase, lease or renting of materials or equipment which is not to be fully performed within one (1) year from the date of execution of the contract.

(ii) Any contract, regardless of term, for the provision of services; other than contracts with employees of the Association, and contracts for attorneys and accountant services, and any other service contracts exempted from the foregoing requirement by the Act or rules set forth in the Florida Administrative Code as they relate to condominiums, as the Act and such rules may be amended from time to time.

Q. Obtaining competitive bids for materials, equipment and services where required by the Act and rules set forth in the Florida Administrative Code as they relate to condominiums, as the Act and such rules may be amended from time to time.

R. All other powers and duties reasonably necessary to operate and maintain the Bay Pointe at Bonita Bay Condominium(s) administered by the Association, in compliance with the Neighborhood Documents and the Act.

ARTICLE XI
INDEMNIFICATION

Every Director and every officer of the Association (and the Directors and/or officers as a group) shall be indemnified by the Association against all expenses and liabilities, including counsel fees (at all trial and appellate levels) reasonably incurred by or imposed upon them in connection with any proceeding, litigation or settlement in which he or she may become involved by reason of his or her being or having been a Director or officer of the Association. The foregoing provisions for indemnification shall apply whether or not he or she is a Director or officer at the time such expenses and/or liabilities are incurred. Notwithstanding the above, in the event of a settlement, the indemnification provisions herein shall not be automatic and shall apply only when the Board approves such settlement and authorizes reimbursement for the costs and expenses of the settlement as in the best interest of the Association. In instances where a Director or officer admits or is adjudged guilty of willful misfeasance or malfeasance in the performance of his or her duties, the indemnification provisions of these Articles shall not apply. Otherwise, the foregoing rights to indemnification shall be in addition to and not exclusive of any and all rights of indemnification to which a Director or officer may be entitled whether by statute or common law. The indemnification

Prepared by: Mary A. Marnell, Esq., FL Bar #0878431
Ruden, McClosky, et al., 5811 Pelican Bay Blvd.
Naples, Florida 34108
(941) 566-7108

hereby afforded to Directors and officers shall also extend to any entity other than the Association found responsible or liable for the actions of such individuals in their capacity as Directors or officers, including, but not limited to Developer.

ARTICLE XII
BYLAWS

The Bylaws of the Association shall be adopted by the First Board and thereafter may be altered, amended or rescinded by the affirmative vote of not less than a majority of the Members present at an Annual Members' Meeting or special meeting of the membership and the affirmative approval of a majority of the Board at a regular or special meeting of the Board. In the event of a conflict between the provisions of these Articles and the provisions of the Bylaws, the provisions of these Articles shall control.

OR2801 PG0990

ARTICLE XIII
AMENDMENTS

A. Prior to the recording of a Declaration amongst the Public Records, these Articles may be amended by an instrument in writing signed by the President (or a Vice President) and the Secretary (or an Assistant Secretary) and filed in the Office of the Secretary of State of the State of Florida. The instrument amending these Articles shall identify the particular Article or Articles being amended, give the exact language of such amendment and give the date of adoption of the amendment by the Board. A certified copy of each such amendment shall always be attached to any certified copy of these Articles or a certified copy of the Articles as restated to include such Amendments and shall be an exhibit to each Declaration upon the recording of each Declaration. This Article XIII is intended to comply with Chapter 617, Florida Statutes.

B. After the recording of the first Declaration amongst the Public Records, these Articles may be amended in the following manner:

1. The Board, as a whole, shall adopt a resolution setting forth the proposed amendment and directing that it be submitted to a vote at a meeting of Members, which may be either the Annual Members' Meeting or a special meeting. Any number of amendments may be submitted to the Members and voted upon by them at one meeting;

2. Written notice setting forth the proposed amendment or a summary of the changes to be effected thereby shall be given to each Member of record entitled to vote within the time and in the manner provided in the Bylaws for the giving of notice of Meetings of Members ("Required Notice");

3. At such meeting a vote of the Members and of the Developer Class shall be taken on the proposed amendments. The proposed amendment shall be adopted upon receiving the affirmative vote of a majority of the votes of all Members entitled to vote thereon unless any Class of Members is entitled to vote thereon as a Class pursuant to Article IV and/or Paragraph XIII.B hereof, in which event the proposed amendment shall be adopted upon receiving the affirmative vote of a majority of the votes of Members of each Class entitled to vote thereon as a Class, the affirmative vote of a majority of the votes of all Members entitled to vote thereon and the approval of the Developer Class; or

4. An amendment may be adopted by a written statement signed by all Directors and written consent of Members representing the Voting Interests sufficient to pass the amendment at a meeting where all members are present and setting forth their intention that an amendment to the Articles be adopted. Where an amendment is passed by written consent in lieu of meeting, those Members not submitting written consent shall be notified in writing of the passage thereof.

Prepared by: Mary A. Marnell, Esq., FL Bar #0878431
Ruden, McClosky, et al., 5811 Pelican Bay Blvd.
Naples, Florida 34108
(941) 566-7108

C. The Developer Class shall be entitled to vote as a Class on all amendments made pursuant to Paragraph XIII.B above.

D. No amendment may be made to the Articles which shall in any manner reduce, amend, affect or modify the terms, conditions, provisions, rights and obligations set forth in the applicable Declaration.

E. A copy of each amendment shall be certified by the Secretary of State of the State of Florida and, after the recordation of a Declaration(s), recorded amongst the Public Records as an amendment to each Declaration.

F. Notwithstanding the foregoing provisions of this Article XIII, there shall be no amendment to these Articles which shall abridge, amend or alter the rights of Developer, including the right to designate and select the Directors as provided in Article IX hereof, without the prior written consent thereto by Developer nor shall there be any amendment to these Articles which shall abridge, alter or modify the rights of the Additional Owner, or of the holder, guarantor or insurer of a first mortgage on any Home or of any "Institutional Mortgagee" (as defined in each Declaration) without such party's prior written consent.

OR2801 PG0991

ARTICLE XIV
EMERGENCY POWERS

The following shall apply to the extent not viewed to be in conflict with the Act:

A. During any emergency defined in Paragraph XIV.E below or in anticipation of such emergency, the Board may:

1. Modify lines of succession to accommodate the incapacity of any Director, officer, agent or employee of the Association; and

2. Relocate the principal office of the Association or designate alternate principal offices or authorize officers to do so.

B. During any emergency defined in Paragraph XIV.E below:

1. One or more officers of the Association present at a meeting of the Board may be deemed to be Directors for the meeting, in order of rank and within the same order of rank in order of seniority, as necessary to achieve a quorum; and

2. The Director or Directors in attendance at a meeting shall constitute a quorum.

C. Corporate action taken in good faith during an emergency under this Article XIV to further the ordinary affairs of the Association:

1. Binds the Association; and

2. May not be used to impose liability on a Director, officer, employee or agent of the Association.

D. A Director, officer or employee of the Association acting in accordance with any emergency bylaws is only liable for willful misconduct.

E. An emergency exists for the purposes of this Article XIV if a quorum of the Directors cannot readily assemble because of a catastrophic event.

Prepared by: Mary A. Mamell, Esq., FL Bar #0878431
Ruden, McClosky, et al., 5811 Pelican Bay Blvd.
Naples, Florida 34108
(941) 566-7108

ARTICLE XV
REGISTERED OFFICE AND REGISTERED AGENT

The street address of the initial registered office of the Association is 6702 Lone Oak Boulevard, Naples, Florida 34109, and the initial registered agent of the Association at that address shall be Timothy J. Ruemler.

IN WITNESS WHEREOF, the Incorporator has hereunto affixed his signature, this 26th day of FEBRUARY, 1997.

TIMOTHY J. RUEMLER

The undersigned hereby accepts the designation of Registered Agent of Bay Pointe at Bonita Bay Condominium Association, Inc. as set forth in Article XV of these Articles of Incorporation and acknowledges that he is familiar with, and accepts the obligations imposed upon registered agents under, the Florida Not For Profit Corporation Act.

TIMOTHY J. RUEMLER

STATE OF FLORIDA
COUNTY OF COLLIER

I HEREBY CERTIFY that on this day, before me a Notary Public duly authorized in the State and County named above to take acknowledgments, personally appeared TIMOTHY J. RUEMLER, to me known to be the person described as the Incorporator in and who executed the foregoing Articles of Incorporation and he acknowledged before me that he executed the same for the purposes therein expressed. He is personally known to me or has produced _____as identification.

WITNESS my hand and official seal in the State and County last aforesaid this 26th day of February, 1997.

Notary Public, State of Florida at Large

Laura M Weiss
Typed, printed or stamped name of Notary

My Commission Expires:

OFFICIAL NOTARY SEAL
LAURA M WEISS
NOTARY PUBLIC STATE OF FLORIDA
COMMISSION NO. CC370469
MY COMMISSION EXP. MAY 5,1998

OR2801 PG0992

Prepared by: Mary A. Marnell, Esq., FL Bar #0878431
Ruden, McClosky, et al., 5811 Pelican Bay Blvd.
Naples, Florida 34108
(941) 566-7108

BYLAWS
OF
BAY POINTE AT BONITA BAY CONDOMINIUM ASSOCIATION, INC.

OR2801 PG0993

Section 1. Identification of Association

These are the Bylaws of BAY POINTE AT BONITA BAY CONDOMINIUM ASSOCIATION, INC. ("Association"), as duly adopted by its Board of Directors ("Board"). The Association is a corporation not for profit, organized pursuant to Chapter 617, Florida Statutes, for the purpose of managing, operating, and administering the development known as Bay Pointe at Bonita Bay as more particularly set forth in the Articles of Incorporation of the Association ("Articles").

1.1. The office of the Association shall be for the present at 4700 Montego Pointe Way, Bonita Springs, Florida 34134, and thereafter may be located at any place designated by the Board.

1.2. The fiscal year of the Association shall be the calendar year.

1.3. The seal of the corporation shall bear the name of the corporation, the word "Florida" and the words "Corporation Not For Profit."

Section 2. Definitions

2.1. All terms shall have the meanings set forth in the Condominium Act, Chapter 718, Florida Statutes, 1995 ("Act") as amended through the date of recording the first "Declaration" amongst the Public Records of Lee County, Florida ("County") and, for clarification, certain terms shall have the meanings ascribed to them in the Articles. All terms defined in the Articles shall appear with initial capital letters each time such term appears in these Bylaws.

2.2. Notwithstanding anything to the contrary, references to any of the Neighborhood Documents shall be deemed to include any amendment to such document as set forth therein.

Section 3. Membership; Members' Meetings; Voting and Proxies

3.1. The qualification of Members, the manner of their admission to Membership and the termination of such Membership shall be as set forth in Article IV of the Articles.

3.2. The Members shall meet annually on the Condominium Property or at such other place in the County, at such time as determined by the Board and as designated in the notice of such meeting ("Annual Members' Meeting"), commencing with the year following the year in which the Articles are filed with the Secretary of State. The purpose of the Annual Members' Meeting shall be to hear reports of the officers, elect members of the Board (subject to the provisions of Article IX of the Articles) and transact any other business authorized to be transacted by the Members.

3.3. Special meetings of the Members or any Class Members, as the case may be, shall be held at any place within the State of Florida whenever called by the President or Vice President of the Association or by a majority of the Board. A special meeting must be called by such President or Vice President upon receipt of a written request from one-third (1/3) of the Members or any Class Members, as the case may be, except as otherwise provided in Sections 4.5(a) and 7.3(b) hereof. Unless specifically stated otherwise herein, the provisions of these Bylaws pertaining to meetings of Members shall also be applicable to meetings of Class Members.

3.4. Except as otherwise provided herein, written notice of a meeting (whether the Annual Members' Meeting or a special meeting of the Members) shall be mailed to each Member at his last known address as it appears on the books of the Association. Proof of such mailing shall be given by affidavit of the person who mailed such notice and also by such other method as may be required by the Act. The notice shall state the time and place of such meeting and the purposes for which the meeting is called. Unless a Member waives in writing the right to receive notice of the meeting, written notice of Annual Members' Meetings and special meetings of the Members shall be mailed or delivered to each Member in the manner required by the Act, not less than fourteen (14) days prior to the date of the meeting. Notice of the Annual Members' Meeting or special meeting of the Members shall be posted at a conspicuous place on the Condominium Property, as more particularly set forth in the Rules and Regulations, at least fourteen (14) continuous days prior to the meeting. If a meeting of the Members, either a special meeting or an Annual Members' Meeting, is one which,

EXHIBIT D

by express provision of the Act or Neighborhood Documents (provided the express provision of the Neighborhood Documents are in accordance with the requirements of the Act) there is permitted or required a greater or lesser amount of time for the mailing or posting of notice than is required or permitted by the provisions of this Paragraph 3.4, then such express provision shall govern.

3.5. The Members or any Class Members, as the case may be, may waive notice of special meetings; and, at the discretion of the Board, act by written agreement in lieu of a meeting. Written notice of the matter or matters to be considered by written agreement in lieu of a meeting shall be given to the Members or any Class Members, as the case may be, at the addresses and within the time periods set forth in Section 3.4 hereof or duly waived in accordance with such Section. The notice shall set forth a time period during which time a response must be made by a Member or "Proxy" (as hereinafter defined). The decision of a majority of a quorum of the Voting Interests (as evidenced by written response to be solicited in the notice) shall be binding on the Members or any Class Members, as the case may be, provided a quorum of the Members or any Class Members, as the case may be, submits a response. However, if the question is one upon which, by express provisions of the Act or the Neighborhood Documents (provided the express provisions of the Neighborhood Documents are in accordance with the requirements of the Act), requires a vote of other than a majority vote of a quorum, then such express provision shall govern and control the required vote on the decision of such question.

3.6. A quorum of the Members shall consist of persons entitled to cast votes on behalf of a majority of the entire Membership. A quorum of any Class Members shall consist of persons entitled to cast votes on behalf of a majority of such Class Members. When a quorum is present at any meeting and a question which raises the jurisdiction of such meeting is presented, the holders of a majority of the Voting Interests present in person or represented by written Proxy shall be required to decide the question. However, if the question is one which, by express provision of the Act or the Neighborhood Documents (provided the express provision of the Neighborhood Documents is in accordance with the requirements of the Act), requires a vote other than the majority vote of a quorum, then such express provision shall govern and control the required vote on the decision of such question.

3.7. If any meeting of the Members or any Class Members, as the case may be, cannot be properly held because a quorum is not in attendance, the Members who are present, either in person or by Proxy, may adjourn the meeting from time to time until a quorum is present. A quorum is not required for an election to occur; however, at least twenty percent (20%) of the eligible voters must cast a ballot in order to have a valid election of Directors. In the case of the meeting being adjourned, the notice provisions for the adjournment shall, subject to the Act, be as determined by the Board.

3.8. At any Annual Members' Meeting at which elections of Directors are to occur, Directors shall be elected by written ballot or voting machine. In no event shall Proxies be used in electing the Board, either in general elections or elections to fill vacancies caused by resignation, recall, or otherwise, unless otherwise provided in the Act. The procedures for the nomination of candidates and voting in elections shall be as provided in Section 718.112(2)(d)(3) of the Act.

3.9. If a quorum is not in attendance at a Meeting, the Members entitled to vote thereat who are present, either in person or by Proxy, may adjourn the Meeting from time to time until a quorum is present with no further notice of such adjourned Meeting being required unless otherwise determined by the Board. In the event any meeting is adjourned or postponed to be continued at another time because a quorum is not present at such meeting, then and in that event, the quorum requirements provided herein shall be reduced to the presence in person or by Proxy of one-third (1/3) of the Voting Interests of Members or Class Members of the Association at the adjourned meeting. Actions approved by a majority of the Voting Interests of Members or Class Members present in person or by Proxy at such adjourned meeting at which such reduced quorum exists shall be binding upon all Members or Class Members and for all purposes except where otherwise provided by law, in any Declaration, in the Articles, or in these Bylaws. This reduction of the quorum requirements shall apply only if the Board sends notice of the adjourned or postponed meeting to the Members or Class Members as elsewhere provided, which notice must specifically provide that quorum requirements will be reduced at the adjourned or postponed meeting.

3.10. Minutes of all meetings shall be kept in a businesslike manner and available for inspection by the Members and Directors at all reasonable times. The Association shall retain minutes for at least seven (7) years subsequent to the date of the meeting the minutes report.

OR2801 PG0994

3.11. If, as and when any additional condominiums developed in Bay Pointe at Bonita Bay, other than Bay Pointe at Bonita Bay, a Condominium, are submitted to condominium ownership, Class Members shall be created for Dwelling Unit Owners in each additional condominium in Bay Pointe at Bonita Bay. All classes of Members shall vote in the manner stated in Article IV of the Articles. Voting rights of Members shall be as stated in the Declaration and the Articles. Such votes may be cast in person or by Proxy. "Proxy" is defined to mean an instrument in writing, signed by a Member, appointing a person to whom the Member delegates the Member's right to cast a vote or votes in the Member's place and stead. Proxies shall be valid only for the particular meeting designated therein and any lawful adjournments thereof; provided, however, that no Proxy shall be valid for a period longer than ninety (90) days after the date of the first meeting for which it was given, provided this express provision is not inconsistent with the requirements of the Act, in which case the Act shall govern and control. Each Proxy shall contain the date, time and place of the meeting for which the Proxy is given. A limited Proxy shall set forth those items which the holder of the Proxy may vote and the manner in which the vote is cast. Members may vote by general Proxy, or by limited proxies. Limited proxies and general proxies may be used to establish a quorum. Limited proxies and general proxies may also be used for voting on the matters outlined in section 718.112(2)(b)2 of the Act. To the extent permitted by law, a proxy limited or general, may be used in the election of the Board. A Proxy must be filed with the Secretary of the Association before the appointed time of the meeting in order to be effective. Any Proxy may be revoked prior to the time a vote is cast by virtue of such Proxy.

OR2801 PG0995

3.12. Upon demand of any Member at any time prior to a vote upon any matter at a meeting of the Members, or any Class Members, any Member may demand voting on such matter shall be by secret ballot. The chairman of the meeting shall call for nominations for inspectors of election to collect and tally written ballots upon the completion of balloting upon the subject matter.

3.13. Members shall have the right to participate in meetings with reference to all designated agenda items in accordance with the Rules and Regulations. In addition, any Member may tape record or videotape a meeting in accordance with the Rules and Regulations.

Section 4. Board of Directors; Directors' Meetings

4.1. The form of administration of the Association shall be by a Board of not less than three (3) Directors. At each Annual Members' Meeting held subsequent to the year in which the Developer's Resignation Event occurs, the number of Directors (which must be an odd number) shall be determined by the Board from time to time. Except for Developer-appointed Directors, Directors must be Members of the Association or the spouses, parents or children of Members.

4.2. The provisions of the Articles setting forth the selection, designation, election and removal of Directors, including but not limited to, the division of the Board into Class Directors are hereby incorporated herein by reference. Voting for Class Directors, if applicable, shall be noncumulative (there shall be appurtenant to each Dwelling Unit as many votes for Directors as there are Directors for the Class to be elected, together with as many votes for Directors as there are Directors-at-large to be elected; provided, however, no Member or Owner may cast more than one (1) vote for each Dwelling Unit owned by him or her for any one (1) person nominated as a Class Director or Director-at-large). Directors elected by the Members in accordance with Article IX of the Articles shall be elected by a plurality of votes cast by the Members present in person or by Proxy and entitled to vote at a properly held Annual Members' Meeting or special meeting of the Members.

4.3. Subject to Section 4.5 below and the rights of Developer as set forth in the Articles and as set forth in Section 4.5(b) below, vacancies on the Board shall be filled by person(s) elected by the affirmative vote of a majority of the remaining Directors (or by the remaining Class Directors in which the vacancy occurs, if applicable). Such person shall be a Director and have all the rights, privileges, duties and obligations as a Director elected at the Annual Members' Meeting. A Director elected by the Board to fill a vacancy shall hold office only until the next election of Directors by the Members.

4.4. The term of each Director's service, except as provided in Section 4.3 of these Bylaws, shall extend until the next Annual Members' Meeting and thereafter, until his successor is duly elected and qualified or until he or she is removed in the manner elsewhere provided herein.

4.5. (a) A Director elected by the Purchaser Members, as provided in the Articles, may be removed from office with or without cause upon the vote or the agreement in writing by a majority of all the Voting Interests. Any such recall shall be effected and a recall election shall be

held, if applicable, as provided in Section 718.112(2)(k), F.S., as it may be amended from time to time.

(b) A Director on the First Board or designated by Developer as provided in the Articles may be removed only by Developer in its sole discretion and without any need for a meeting or vote. Developer shall have the unqualified right to name successors to fill any vacancies occurring for any reason on the Board among Directors on the First Board or designated by it, and Developer shall notify the Board as to any such removal or vacancy and the name of the successor Director and of the commencement date for the term of such successor Director.

ORB 801 PG0996

4.6. The organizational meeting of the newly elected Board shall be held within ten (10) days of its election at such place and time as shall be fixed by the Directors at the meeting at which they were elected. No further notice of the organizational meeting shall be necessary, providing that a quorum shall be present at such organizational meeting.

4.7. Regular meetings of the Board may be held at such time and place as shall be determined from time to time by a majority of Directors. Special meetings of the Board may be called at the discretion of the President or the Vice President of the Association. Special meetings must be called by the Secretary at the written request of one-third (1/3) of the Directors. The provisions of these Bylaws pertaining to meetings of the Board as a whole shall also be applicable to meetings of Class Directors.

4.8. Notice of the time, agenda and place of regular and special meetings of the Board, or adjournments thereof, shall be given to each Director personally or by mail, telephone or telegraph at least three (3) days prior to the day specified for such meeting. Except in an emergency, notice of a Board meeting shall be posted conspicuously on the Condominium Property of each additional condominium in Bay Pointe at Bonita Bay, as more specifically set forth in the Rules and Regulations, at least forty-eight (48) continuous hours in advance for the attention of Members. Notice of any meeting where regular assessments against Members are to be considered for any reason shall specifically contain a statement that assessments will be considered and the nature of any such assessments. Notice of a meeting where non-emergency Special Assessments or amendments to rules regarding Dwelling Unit use will be considered, shall be mailed or delivered to the Dwelling Unit Owners and posted conspicuously on the Condominium Property not less than fourteen (14) days prior to the meeting. Proof of such mailing shall be given by affidavit executed by the person providing the notice and filed among the official records of the Association. Any Director may waive notice of the meeting before, during or after a meeting and such waiver shall be deemed equivalent to the receipt of notice by such Director.

4.9. For matters to be considered by the Board as a whole, as set forth in Article IX, Paragraph M of the Articles, a quorum of the Board shall consist of the Directors entitled to cast a majority of the votes of the entire Board. Matters approved by a majority of the Directors present at a meeting at which a quorum is present shall constitute the official acts of the Board, except as specifically provided elsewhere herein or in any of the Neighborhood Documents. For matters to be considered by Class Directors, as set forth in Article IX, Paragraph M of the Articles, a quorum of the Board shall consist of a majority of the Directors of the affected Class Directors and such matters approved by a majority of the Class Directors present at a meeting at which a quorum is present shall constitute the official acts of the Board, except as specifically provided elsewhere herein or in any of the Neighborhood Documents. A Director who is present at a meeting of the Board at which action on any corporate matter is taken shall be presumed to have assented to the action taken, unless he or she votes against such action or abstains from voting in respect thereto because of an asserted conflict of interest. A vote or abstention for each Director present shall be recorded in the minutes. If at any meetings of the Board there shall be less than a quorum present, the majority of those present entitled to vote may adjourn the meeting from time to time until a quorum is present. At any properly held adjourned meeting any business which might have been transacted at the meeting as originally called may be transacted. In the case of the adjournment of a meeting, the notice provisions for the adjournment shall, subject to the Act, be as determined by the Board.

4.10. The presiding officer at Board meetings shall be the President. In the absence of the President, the Directors present shall designate any one of their number to preside.

4.11. Directors shall not receive any compensation for their services.

4.12. The Board shall have the power to appoint executive committees of the Board consisting of not less than two (2) Directors. Executive committees shall have and exercise such powers of the Board as may be delegated to such executive committees by the Board.

4.13. Meetings of the Board shall be open to all Members. Members shall have the right to participate in meetings with reference to all designated agenda items in accordance with the Rules and Regulations. In addition, any Member may tape record or videotape a meeting in accordance with the Rules and Regulations.

Section 5. Fining Procedure for Enforcement of the Neighborhood Documents; Fees

5.1. A nonexclusive optional procedure for Board enforcement of the Neighborhood Documents, including the rules and regulations, shall be as follows:

5.1.1. First Offense (1st Notice)

When the Association becomes aware of noncompliance of a rule or regulation by a Dwelling Unit Owner, family member, guest, invitee or lessee, it shall send a certified letter to the Dwelling Unit Owner advising him or her of the rule which he or she has been accused of violating and warning that strict compliance with the rules and regulations will be required. Each day on which a violation occurs shall be deemed to be a separate offense.

5.1.2. Second Offense (2nd Notice)

If the Association receives a second report that a violation has been repeated or has been continued beyond the time specified within the first notice, the Board, after verifying the violation, may authorize a fine to be levied upon the Dwelling Unit Owner. The fine for a second offense may not exceed the maximum amount permitted by the Act. Notice of a second violation shall be sent to the Dwelling Unit Owner by certified mail.

5.1.3. Third Offense (3rd Notice)

If the Association receives a third report that a violation has been repeated or has continued beyond the time specified within the second notice, the Owner may be charged a fine in an amount not to exceed the maximum amount permitted by the Act, following verification of the violation by the Board.

5.1.4. Fourth Offense

For repeated offenses or in any case where the Board deems it appropriate, the Board may seek injunctive relief through court action. In addition, a fine may be levied on the basis of each day of a continuing violation, with a single notice and opportunity for hearing, provided that no such fine shall in the aggregate exceed the amount set forth in Section 718.303(3) of the Act.

5.2. Exemptions and Hearings

(a) Any Dwelling Unit Owner may appear before the Association to seek an exemption from or variance in the applicability of any given rule or regulation as it relates to said person on grounds of undue hardship or other special circumstances.

(b) Where the Association levies fines, such fines shall be levied pursuant to the procedures set forth in the Rules and Regulations.

5.3. A Dwelling Unit Owner who fails to timely pay any Neighborhood Assessment shall be charged a late charge by the Association for such late Neighborhood Assessment in an amount not to exceed the maximum amount permitted by the Act. Owners shall be responsible to pay all legal fees (including, but not limited to, attorney and paralegal fees and court costs) incurred in connection with the collection of late Neighborhood Assessments whether or not an action at law to collect said Neighborhood Assessment and foreclose the Association's lien has been commenced. The Board has authorized the following initial schedule of fees for such circumstances (which is, however, subject to change without notice as provided in Paragraph 5.4):

(a) Fifty Dollars ($50) for a warning letter to a Dwelling Unit Owner that he or she is delinquent in the payment of his Neighborhood Assessments;

OR2801 PG0997

(b) One Hundred Dollars ($100) for a Claim of Lien plus recording costs of $6.00 and sending of Notice of Intention to Foreclose;

(c) Fifty Dollars ($50) for any subsequent Claims of Lien plus recording costs;

(d) Fifty Dollars ($50) for a Satisfaction of Lien plus recording costs; and

(e) Any further action would require an hourly computation of attorney and/or paralegal time spent pursuing collection of such unpaid Assessments.

OR2801 PG0998

5.4. (a) The existence of the Association's right to fine as herein provided shall not preclude nor limit its right to seek any other enforcement method or remedy provided: (i) pursuant to the Neighborhood Documents; (ii) at law; or (iii) in equity.

(b) The amount of the fines as set forth herein may be increased by the Board in its sole discretion; provided, however, any such increase shall conform to the applicable requirements of the Act as to the maximum dollar amount of such fines as such maximum dollar amount may be increased by amendment of the Act from time to time.

5.5. Written Complaints by Owners

Written complaints by Members to the Board shall be handled in accordance with Section 718.112(2)(a)2, F.S., as it may be amended from time to time.

5.6. A fee in an amount determined by the Board in compliance with the provisions of the Act may be charged by the Board for the approving or disapproving of proposed purchasers of Dwelling Units.

Section 6. Officers of the Association

6.1. Executive officers of the Association shall be the President, who shall be a Director, one or more Vice Presidents, a Treasurer, a Secretary and, if the Board so determines, an Assistant Secretary and an Assistant Treasurer, all of whom shall be elected annually by the Board. Any officer may be removed from office without cause by vote of the Directors at any meeting of the Board. The Board shall, from time to time, elect and designate the powers and duties of such other officers and assistant officers as the Board shall find to be required to manage the affairs of the Association.

6.2. The President, who shall be a Director, shall be the chief executive officer of the Association. The President shall have all of the powers and duties which are usually vested in the office of the President of a condominium association including, but not limited to, the power to appoint committees from among the Members at such times as he or she may, in his discretion, determine appropriate to assist in conducting the affairs of the Association. The President shall preside at all meetings of the Board.

6.3. The Vice President(s) shall generally assist the President and exercise such other powers and perform such other duties as shall be prescribed by the Board. In the event there shall be more than one Vice President elected by the Board, then they shall be designated "First," "Second," etc. and shall be called upon in such order to exercise the powers and perform the duties of the President if he or she is absent or incapacitated.

6.4. The Secretary shall cause the minutes of all meetings of the Board and of the Members to be kept, which minutes shall be recorded in a businesslike manner and shall be available for inspection by Members and Directors at all reasonable times. The Secretary shall have custody of the seal of the Association and shall affix the same to instruments requiring a seal when duly signed. He or she shall keep the records of the Association, except those of the Treasurer, and shall perform all of the duties incident to the office of Secretary of the Association as may be required by the Board or the President. The Assistant Secretary, if any, shall assist the Secretary and shall perform the duties of the Secretary when the Secretary is absent.

6.5. The Treasurer shall have custody of all the property of the Association, including funds, securities and evidences of indebtedness. He or she shall keep the assessment rolls and accounts of the Members; he or she shall keep the books of the Association in accordance with good accounting practices; and he or she shall perform all the duties incident to the office of Treasurer.

The Assistant Treasurer, if any, shall assist the Treasurer and shall perform the duties of the Treasurer whenever the Treasurer is absent.

6.6. Officers shall not receive compensation for their services. The compensation, if any, of all other employees of the Association shall be fixed by the Board. This provision shall not preclude the Board from employing a Director or an officer as an employee of the Association nor preclude the contracting with a Director or an officer for the management of all or any portion of Bay Pointe at Bonita Bay.

OR2801 PG0999

Section 7. Accounting Records; Fiscal Management

7.1. Accounting Records

(a) The Association shall maintain the official records of the Association in accordance with Section 718.111(12) of the Act, which records shall be open to inspection by Members and owners of first mortgages on Dwelling Units or their authorized representatives at reasonable times. The Association may charge Dwelling Unit Owners, owners of first mortgages on Dwelling Units or their authorized representative its actual costs for preparing and furnishing copies of the documents including, but not limited to, the Declaration, Articles, Bylaws, Rules and Regulations, question and answer sheet and any amendment to the foregoing to those requesting same. Authorization of a representative of a Member must be in writing, signed by the Member giving the authorization and dated within ten (10) working days before the date of the inspection. The official records shall include accounting records for the Association and separate accounting records for each condominium it operates, maintained according to good accounting practices, and such accounting records shall be maintained for a period of not less than seven (7) years. Accounting records so maintained by the Association shall include, but are not limited to: (i) accurate, itemized and detailed records of all receipts and expenditures; (ii) a current account, and a quarterly statement of the account for each Dwelling Unit or as reported at such interval as may be required by the Act as amended from time to time by the Florida Legislature, designating the name of the Dwelling Unit Owner, the due date and amount of each Neighborhood Assessment, the amount paid upon the account, and the balance due; (iii) all audits, reviews, accounting statements and financial reports of the Association; and (iv) all contracts for work to be performed, and such bids shall be considered official records and maintained for a period of one (1) year.

(b) A report of the actual receipts and expenditures of the Association for the previous twelve (12) months ("Report") shall be prepared annually by an accountant or Certified Public Accountant unless this requirement is waived pursuant to Section 718.111(14) of the Act. The Report shall be prepared consistent with the requirements of Rule 61B-22.006, F.A.C. and a copy of such report shall be furnished in accordance with the Act to each Member not later than the first day of April of the year following the year for which the Report is made. The Report will include account classifications designated in the Act, if applicable, and accounts otherwise included at the Board's discretion. The Report shall be deemed to be furnished to the Member upon its delivery or mailing to the Member at the last known address shown on the books and records of the Association. In the event the requirements of Rule 61B-22.006, F.A.C. are properly waived, then the Report shall be prepared and furnished complying with Section 718.111(13) of the Act and Rules 61B-22.006(2) and (3), F.A.C.

7.2. Budget

(a) The Board shall adopt the budget for the Neighborhood Common Expenses of each condominium in Bay Pointe at Bonita Bay and, if applicable, a schedule for Association Expenses ("Budget") for each forthcoming fiscal year ("Budget Year") at a special meeting of the Board ("Budget Meeting") called for that purpose in October or November prior to the applicable Budget Year. Prior to the Budget Meeting, a proposed Budget for each condominium in Bay Pointe at Bonita Bay shall be prepared by or on behalf of the Board, which Budget(s) shall include, but not be limited to, the following items of expense applicable to each condominium in Bay Pointe at Bonita Bay:

(i) Administration of the Association
(ii) Utilities
(iii) Management Fees
(iv) Maintenance
(v) Rent for recreational and other commonly used facilities
(vi) Taxes upon Association property

(vii) Taxes upon leased areas
(viii) Insurance
(ix) Security provisions
(x) Other expenses
(xi) Operating capital
(xii) Reserves for Capital Expenditures and Deferred Maintenance
(xiii) Fees payable to the Division of Florida Land Sales, Condominiums and Mobile Homes

(b) The Budget for each condominium in Bay Pointe at Bonita Bay constitutes an estimate of the expenses to be incurred by the Association for and on behalf of such condominium in Bay Pointe at Bonita Bay. The procedure for the allocation of the expenses attributable to each condominium in Bay Pointe at Bonita Bay, which are the Neighborhood Common Expenses of such condominium in Bay Pointe at Bonita Bay, shall be as follows:

(i) Expenses of the Association which are applicable to more than one (1) condominium in Bay Pointe at Bonita Bay (such as administrative expenses) shall be allocated by the Board amongst the several condominiums in Bay Pointe at Bonita Bay to which such expenses are applicable by multiplying the amount of such expenses by a fraction with respect to each condominium in Bay Pointe at Bonita Bay, the numerator of which is the number of Dwelling Units within the particular condominium in Bay Pointe at Bonita Bay to which such expenses are being allocated and the denominator of which is the total number of Dwelling Units in the various condominiums in Bay Pointe at Bonita Bay to which such expenses are applicable; provided, however, that if such method of allocation is inequitable due to the fact that a grossly disproportionate amount of such expenses are attributable to a particular condominium in Bay Pointe at Bonita Bay, then the Board may allocate such expenses in a manner deemed by it to be fair and equitable.

(ii) Expenses of the Association which are applicable to one (1) condominium in Bay Pointe at Bonita Bay (such as, but not limited to, utilities and maintenance for the Common Elements of a particular condominium in Bay Pointe at Bonita Bay) shall be allocated by the Board as a Neighborhood Common Expense solely of such condominium in Bay Pointe at Bonita Bay.

(iii) In the event there is only one (1) condominium in Bay Pointe at Bonita Bay, then all expenses of the Association shall be applicable to that condominium.

(c) Association Expenses with respect to the Association Property, if any, shall be assessed equally against all Dwelling Units by dividing the amount of the Association Expenses by the total number of Dwelling Units in all of the condominiums in Bay Pointe at Bonita Bay, as they may exist from time to time.

(d) The Board shall establish and maintain an adequate reserve fund for the periodic maintenance, repair and replacement of the Condominium Property. The Budget for each condominium in Bay Pointe at Bonita Bay shall include, on an annual basis, the establishment of reserve accounts for capital expenditures and deferred maintenance of the Condominium Property. The reserve accounts shall include, but not be limited to, roof replacement, roadway resurfacing and building exterior repainting regardless of the amount of deferred maintenance expense or replacement cost, and for any other items for which the deferred maintenance expense or replacement cost exceeds Ten Thousand Dollars ($10,000). The amount to be reserved shall be computed by means of a formula which is based upon estimated remaining useful life and estimated replacement cost or deferred maintenance expense of each reserve item. Notwithstanding any other provisions to the contrary contained herein, in the event that, by a majority vote of either Members or Class Members, as applicable, at a duly called meeting of the Association, less than a full reserve or no reserve for deferred maintenance and replacement is elected, then the applicable Budget shall be based on such lesser reserves or no reserves, as the case may be. Reserve funds and any interest accruing thereon shall remain in the reserve account or accounts, and shall be used only for authorized reserve expenditures, unless their use for other purposes is approved in advance by a vote of the majority of the Voting Interests voting in person or by limited proxy at a duly called meeting of the Association.

(e) Copies of the applicable proposed Budget and notice of the exact time and place of the Budget Meeting shall be mailed to each Member or Class Member at the Member's last known address, as reflected on the books and records of the Association, not less than fourteen (14) days prior to said Budget Meeting, and the Budget Meeting shall be open to the Members. Failure

OR2801 PG1000

to timely adopt a Budget for each condominium in Bay Pointe at Bonita Bay shall not alter or abrogate the obligation to pay Neighborhood Common Expenses.

(f) In administering the finances of the Association, the following procedures shall govern: (i) the fiscal year shall be the calendar year; (ii) any income received by the Association in any calendar year may be used by the Association to pay expenses incurred by the Association in the same calendar year; (iii) there shall be apportioned between calendar years on a pro rata basis any expenses which are prepaid in any one (1) calendar year for Neighborhood Common Expenses which cover more than such calendar year; (iv) Neighborhood Assessments shall be made not less frequently than quarterly in amounts no less than are required to provide funds in advance for payment of all of the anticipated current expenses and for all unpaid expenses previously incurred; and (v) expenses incurred in a calendar year shall be charged against income for the same calendar year regardless of when the bill for such expenses is received. Notwithstanding the foregoing, Neighborhood Assessments shall be of sufficient magnitude to insure an adequacy and availability of cash to meet all budgeted expenses and anticipated cash needs in any calendar year as such expenses are incurred in accordance with the cash basis method of accounting. The cash basis method of accounting shall conform to generally accepted accounting standards and principles.

OR2801 PG1001

(g) No Board shall be required to anticipate revenue from Neighborhood Assessments or expend funds to pay for Neighborhood Common Expenses not included in a Budget or which shall exceed budgeted items, and no Board shall be required to engage in deficit spending. Should there exist any deficiency which results from expenses being greater than income from Neighborhood Assessments, then such deficits shall be carried into the applicable Budget for the next succeeding year as a deficiency or shall be the subject of a Special Assessment to be levied by the Board as otherwise provided in the applicable Declaration.

(h) The Board may also include in the proposed Budget a sum of money as an assessment for the making of betterments to the Condominium Property and for anticipated expenses by the Association which are not anticipated to be incurred on a regular or annual basis. This sum of money so fixed may then be levied upon the Members by the Board as a Special Assessment and shall be considered an "Excluded Expense" under Section 7.3(a) hereof.

7.3. Adoption of Budget

Until the provisions of Section 718.112(2)(e) of the Act relative to the Members' approval of a Budget requiring Neighborhood Assessments against the Members in excess of 115% of such Neighborhood Assessments for the Members in the preceding year are declared invalid by the courts, or until amended by the Florida Legislature, the following shall be applicable (however, if such amendment merely substitutes another amount for 115%, then such new amount shall be substituted for 115% each time it is used in this Section 7.3):

(a) Should the Budget adopted by the Board at the Budget Meeting require Neighborhood Assessments against Members of an amount which is not greater than one hundred fifteen percent (115%) of such Neighborhood Assessments for the prior year, the Budget shall be deemed approved by all Members. If, however, the Neighborhood Assessments required to meet the Budget exceed one hundred fifteen percent (115%) of such assessments for the Membership for the preceding year ("Excess Assessment"), then the provisions of Subsections 7.3(b) and (c) hereof shall be applicable. There shall be excluded in the computation of the Excess Assessment certain expenses ("Excluded Expenses") as follows:

(1) Reserves for repair or replacement of any portion of the Condominium Property;

(2) Expenses of the Association which are not anticipated to be incurred on a regular or annual basis;

(3) Expenses for betterments to the Condominium Property;

(4) Cable Expenses;

(5) Common Expenses of the Community Association; and

(6) Recreation Center Expenses.

(b) Should the Excess Assessment be adopted by the Board, then upon delivery to the Board, within twenty (20) days after the Budget Meeting, of a written application requesting a special meeting signed by ten percent (10%) of the Voting Interests of the Dwelling Units, the Board shall call a special meeting to be held upon not less than ten (10) days' written notice to each Member, but to be held within thirty (30) days of the delivery of such application to the Board. At said special meeting, the Members shall consider and enact a Budget of Neighborhood Common Expenses. The adoption of the revisions to the Budget of Neighborhood Common Expenses shall require approval of not less than a majority of Voting Interests appurtenant to all Dwelling Units in each condominium in Bay Pointe at Bonita Bay. The Board may propose revisions to the Members at a meeting of Members or in writing, and, if a revised Budget of Neighborhood Common Expenses is enacted at said special meeting, then the revised Budget shall be, as to the Neighborhood Common Expenses, incorporated into the final Budget. If no written application is delivered as provided herein and a quorum is not obtained or a substitute budget is not adopted by the Members, then the Budget originally adopted by the Board shall be the final Budget and shall go into effect as scheduled.

(c) Until the Majority Election Date, the Board shall not impose a Neighborhood Assessment pursuant to a Budget for Neighborhood Common Expenses for each condominium in Bay Pointe at Bonita Bay which is greater than one hundred fifteen percent (115%) of the prior fiscal year's Neighborhood Assessment without approval of a majority of the Voting Interests of Members to be so assessed.

(d) If, as and when any additional condominium(s) in Bay Pointe at Bonita Bay, other than the Bay Pointe at Bonita Bay, a Condominium, are created pursuant to the Act, then the Budget shall allocate Neighborhood Assessments for Neighborhood Common Expenses to each condominium in Bay Pointe at Bonita Bay. In each case in which the Neighborhood Assessments for Neighborhood Common Expenses for the affected condominium in Bay Pointe at Bonita Bay [less expenses for matters similar to those matters set forth in Paragraphs 7.3(a)(1), 7.3(a)(2) and 7.3(a)(3) above] exceed one hundred fifteen percent (115%) of such Neighborhood Assessments for the prior year, the affected Members shall have the right to revise the Budget as same applies to them in the same manner as set forth in Paragraph 7.3(b) above.

7.4. Allocation of Neighborhood Common Expenses

(a) The portion of the expenses to be allocated to the operation and management of each condominium in Bay Pointe at Bonita Bay shall be set forth in the Budget and shall constitute the Neighborhood Common Expenses of such condominium in Bay Pointe at Bonita Bay. The Neighborhood Common Expenses shall be apportioned to each Dwelling Unit Owner based upon his share of Neighborhood Common Expenses, as provided in the Declaration of each condominium in Bay Pointe at Bonita Bay.

(b) Notwithstanding the allocation to each Dwelling Unit of its share of Neighborhood Common Expenses, an Owner shall also be liable for any Special Assessments levied by the Board against his Dwelling Unit as provided in the Neighborhood Documents. The funds collected pursuant to a Special Assessment shall be used only for the specific purpose or purposes set forth in such notice, or returned to the Owners; provided, however, that upon completion of such specific purpose or purposes any excess funds shall be considered Common Surplus. The Association shall collect Neighborhood Assessments and Special Assessments for Neighborhood Common Expenses from a Dwelling Unit Owner in the manner set forth in the Neighborhood Documents.

(c) To the extent that the Association at any time has either a Common Surplus or Neighborhood Common Expense in regard to the operation of condominium(s) in Bay Pointe at Bonita Bay which cannot be attributed to one or more particular condominium in Bay Pointe at Bonita Bay, then such Common Surplus or Neighborhood Common Expense shall be prorated equally based on the number of Dwelling Units within each condominium in Bay Pointe at Bonita Bay and thereafter be deemed a Neighborhood Common Expense or Common Surplus of each condominium in Bay Pointe at Bonita Bay as set forth in its Declaration.

(d) If, as and when any additional condominiums in Bay Pointe at Bonita Bay are created pursuant to the Act, the expenses attributable to each condominium in Bay Pointe at Bonita Bay shall be allocated and apportioned to each condominium in Bay Pointe at Bonita Bay in the manner set forth in Paragraphs 7.4(a) and 7.4(b) above.

OR2801 PG1002

7.5 Depository

The depository of the Association shall be such bank or banks as shall be designated from time to time by the Board in which the monies of the Association shall be deposited. All funds shall be maintained separately in the Association's name, and reserve and operating funds of the Association shall not be commingled. Withdrawal of monies from such account shall be only by checks signed by such persons as are authorized by the Board. Notwithstanding the foregoing, the President and/or the Treasurer of the Association shall be authorized to sign checks on behalf of the Association, unless otherwise specified by the Board.

Section 8. Rules and Regulations

The Board may adopt rules and regulations or amend or rescind existing rules and regulations for the operation and use of each condominium in Bay Pointe at Bonita Bay at any meeting of the Board; provided such rules and regulations are not inconsistent with the Neighborhood Documents nor detrimental to sales of Dwelling Units by Developer. Copies of any rules and regulations promulgated, amended or rescinded shall be mailed to all Dwelling Unit Owners at the last known address as shown on the books and records of the Association and shall not take effect until forty-eight (48) hours after such mailing.

OR2801 PG1003

Section 9. Parliamentary Rules

The then latest edition of Robert's Rules of Order shall govern the conduct of meetings of this Association when not in conflict with the Neighborhood Documents or the Act. In the event of a conflict, the provisions of the Neighborhood Documents and the Act shall govern.

Section 10. Amendments of the Bylaws

10.1. These Bylaws may be amended by the affirmative vote of not less than a majority of the votes of Members entitled to vote thereon, represented in person or by Proxy at a properly held Annual Members' Meeting or special meeting of the Membership and the approval of a majority of the Board at a regular or special meeting of the Board. A copy of the proposed amendment shall be sent to each Member along with notice of the Annual Members' Meeting or special meeting. An amendment may be approved at the same meeting of the Board and/or Members at which such amendment is proposed.

10.2. An amendment may be proposed by either the Board or by the Members, and after being proposed and approved by one of such bodies, must be approved by the other as set forth above in order to become enacted as an amendment.

10.3. No modification or amendment to these Bylaws shall be adopted which would affect or impair the priority of any holder, insurer or guarantor of a first mortgage on any Dwelling Unit in Bay Pointe at Bonita Bay, the validity of such mortgage or any of the rights of Developer.

Section 11. Fidelity Bonding

The Association shall obtain and maintain adequate fidelity bonding of all persons who control or disburse funds of the Association in accordance with Section 718.112(2)(j) of the Act.

Section 12. Condemnation of Common Elements

The Association has a limited power to convey a portion of the Common Elements to a condemning authority for the purpose of providing utility easements, right-of-way expansion or other public purposes, whether negotiated or as a result of eminent domain proceedings.

BAY POINTE AT BONITA BAY CONDOMINIUM ASSOCIATION, INC.

By: _____
DIANA M. FLISS, President

Attest: _____
MIKE McLEOD, Secretary

(CORPORATE SEAL)

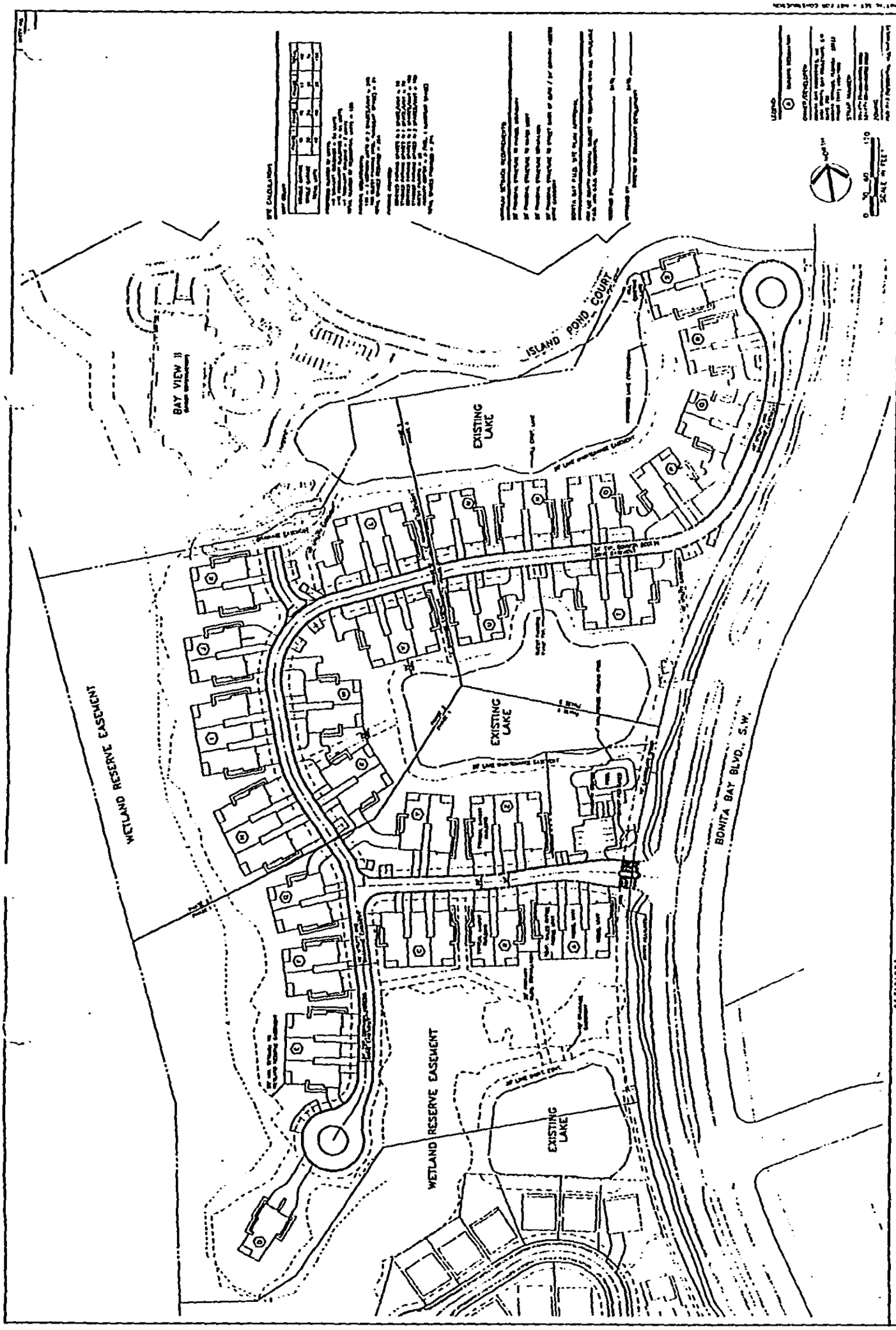
P.U.D. SITE PLAN
JOHNSON ENGINEERING, INC.
BONITA BAY PROPERTIES, INC.
ISLAND POND COURT
BAY VIEW II
EXISTING LAKE
EXISTING LAKE
EXISTING LAKE
WETLAND RESERVE EASEMENT
WETLAND RESERVE EASEMENT
BONITA BAY BLVD. S.W.
SCALE IN FEET

EXHIBIT E

BAY POINTE AT BONITA BAY, A CONDOMINIUM

MAY 1996

OR2801 PG1005

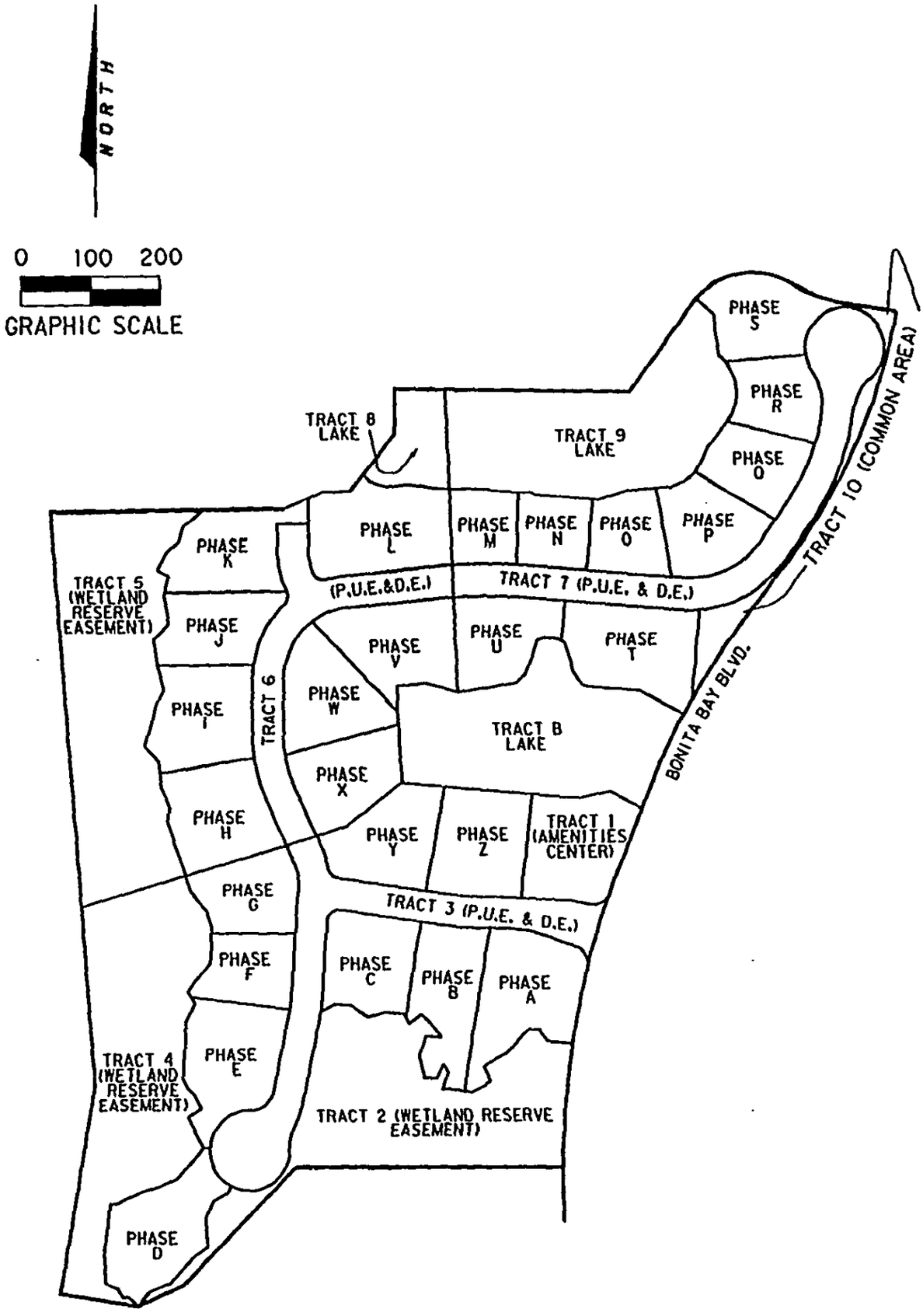

***-Tract B is depicted for informational purposes only. Tract B is not a part of the condominium.

POST, BUCKLEY, SCHUH & JERNIGAN, INC.
ENGINEERS, PLANNERS & SURVEYORS
6326 PRESIDENTIAL COURT
FORT MYERS, FLORIDA 33919
(941)-482-7275

LOCATION MAP

BAY POINTE AT BONITA BAY, A CONDOMINIUM

MAY 1996

OR2801 PG1006

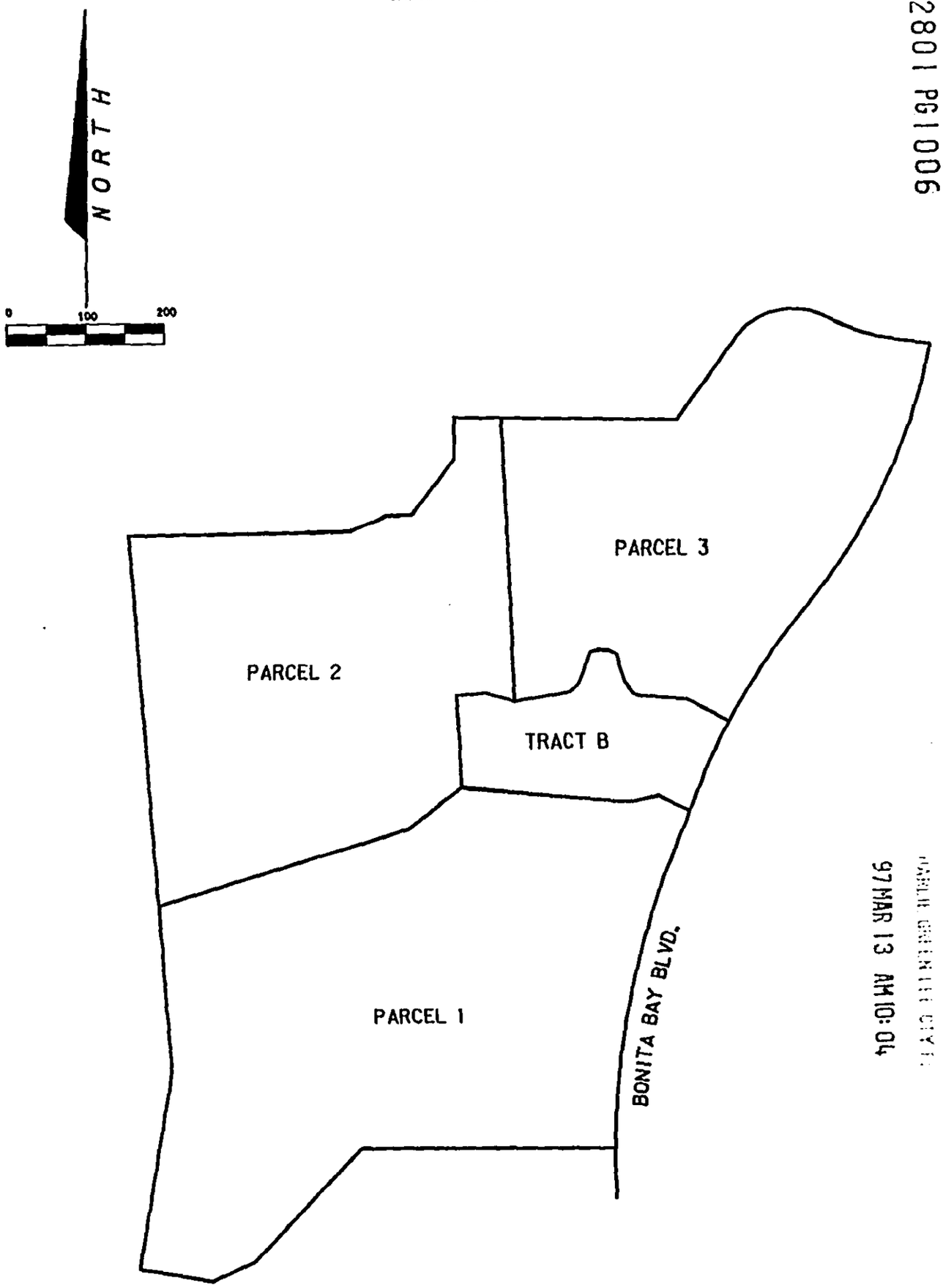

97 MAR 13 AM 10:04

***- Tract B is depicted for informational purposes only. Tract B is not a part of the condominium.

POST, BUCKLEY, SCHUH & JERNIGAN, INC.
ENGINEERS, PLANNERS & SURVEYORS
6326 PRESIDENTIAL COURT
FORT MYERS, FLORIDA 33919
(941)-482-7275

PARCEL MAP