BABCOCK RANCH
FLORIDA

DESIGN GUIDELINES

(Commercial, Hardscape, Residential, Landscape)

VERSION ONE | 09.2026

Introduction

Welcome to Babcock Ranch, The Standard for Thoughtful, Environmentally Responsible and Sustainable Development! A Development Designed to Enrich the Human Experience, Where People and Nature are Inseparable.

Babcock Ranch stands as America's first solar-powered town, a pioneering model of thoughtful, environmentally responsible development. The Design Guidelines presented in this document provide a comprehensive framework that governs all aspects of the built and natural environments—ensuring that every neighborhood, building, landscape, street, and public space contributes to a cohesive, enduring, and sustainable community identity.

These guidelines apply to Commercial, Residential Neighborhood Planning, Parcel Development, Landscape, and Hardscape/Public Realm design. Together, they establish the standards necessary to uphold the community's values of innovation, environmental stewardship, resiliency, and quality of life.

This document has been formatted for ease of use on digital platforms. All items that are underlined within this document have been linked to their corresponding source. Page numbers at the bottom of the page will redirect you back to the table of contents for that chapter.

Chapter One_Table of Contents
Commercial Guidelines

- Introduction..... 8
- Legal Notice..... 9
- Glossary and References..... 10
- Commercial Types..... 11
- BRCISD Approval Process..... 17
- Vision and Sustainability Guiding Principles..... 18
- Sustainability Requirements..... 19
- Land Use and Site Planning..... 21
- Solid Waste Access and Circulation..... 23
- Emergency Access and Circulation..... 24
- Architectural Guiding Principles..... 25
- Development Areas and Architectural Styles..... 27
  - WestTown Architectural Design Principles..... 28
  - MidTown Architectural Design Principles..... 30
  - EastTown Architectural Design Principles..... 32
- Spine Roads..... 34
- Parking..... 35
- Landscape Planning..... 37
- Open Space Planning..... 38
- Service and Utility Locations..... 40
- Founders Square Case Study..... 42
- Inspirational Examples..... 47

Chapter Two_Table of Contents
Hardscape Guidelines

Introduction..... 61
Legal Notice..... 62
Glossary and References..... 63
Vision and Sustainability Guiding Principles..... 65
Hardscape Planning..... 66
Monument Signage..... 67
Neighborhood Entrance Signage..... 71
Commercial Signage..... 74
Wayfinding Signage..... 76
Street Signage Requirements..... 78
Park Entrance Signage..... 80
Trail Signage..... 81
Street Light Requirements..... 83
Accent Lighting..... 85
Perimeter Walls & Fences..... 86
Furnishings, Structures & Equipment..... 87

- Trash & Recycling..... 88
- Hydration Amenities..... 89
- Bicycle Racks & Stalls..... 90
- Playgrounds & Equipment..... 91
- Shade Structures..... 94
- Planter Boxes..... 95
- Bollards..... 96
- Public Seating..... 97

Chapter Three_Table of Contents
Residential Guidelines

Introduction..... 99
Legal Notice..... 101
Glossary and References..... 102
BRCISD Approval Process..... 103
Development Areas..... 104
Land Use and Site Planning..... 105
MURC Development Standards (Setbacks)..... 108
Architectural Philosophy..... 113
Architectural Guiding Principles..... 114
Florida Green Home Standards..... 116
Utility Infrastructure Planning..... 118
Lift Stations & Utility Sites..... 119
Resiliency and Flood Protection Requirements..... 121
Energy and Sustainability Design Requirements..... 123
Energy Efficiency and Building Performance..... 124
Trail Connectivity..... 126
Solid Waste Access and Circulation..... 128
Emergency Access and Circulation..... 129
Open Space Planning Strategies..... 131
Amenity Site Principles..... 135
Technology Requirements..... 141
Color Palette..... 143
Babcock Ranch Residential Association..... 146

Chapter Four_Table of Contents
Landscape Guidelines

Introduction..... 148
Legal Notice..... 149
Glossary and References..... 150
Vision..... 151
Guiding Principles..... 152
Sustainability & Performance Requirements..... 153
Plant Design & Characteristics..... 155
Plant Typologies..... 157
- Pine Groves..... 160
- Oak Groves..... 163
- Sabal Palm Hammocks..... 167
- Buttonwood Groves & Natural Screening..... 171
- Grasses & Groundcover Drifts..... 174
- Verges & Medians..... 177
- Perimeter Buffers..... 180
- Lakefront Buffers & Littoral Zones..... 182
- Open Space..... 185

BABCOCK RANCH
FLORIDA

COMMERCIAL GUIDELINES

Introduction

Welcome to Babcock Ranch, The Standard for Thoughtful, Environmentally Responsible and Sustainable Development! A Development Designed to Enrich the Human Experience, Where People and Nature are Inseparable.

Commercial Guidelines establish a clear framework for creating high-quality, sustainable, and cohesive commercial development throughout the community. As America's first solar-powered town, Babcock Ranch is founded on principles of innovation, resiliency, sustainability, walkability, and environmental stewardship. These guidelines ensure that commercial projects contribute positively to the community's long-term vision while supporting economic vitality and everyday functionality.

Commercial development within Babcock Ranch includes a diverse range of uses—retail, office, mixed-use, employment, hospitality, civic, and institutional—that collectively shape the character and experience of the community. The guidelines provide direction for land use, site planning, architecture, landscape design, circulation, sustainability, and infrastructure to promote consistency, quality, and compatibility across all commercial districts.

These guidelines are intended to inspire thoughtful decision-making and meaningful dialogue that helps guide developers, architects, planners, and engineers in making informed design decisions that balance performance, aesthetics, and environmental responsibility. While flexibility and creativity are encouraged, all commercial projects must align with the overarching goals of Babcock Ranch: to create walkable, resilient, and thoughtfully designed places that serve current needs while remaining adaptable for future growth.

By adhering to these Commercial Guidelines, each project becomes part of a unified vision—reinforcing Babcock Ranch's identity as a forward-thinking community where innovation, technology, and sustainability are integrated into every aspect of the built environment.

Legal Notice & Special Exception

Guidelines set forth in this document, and the interpretations of same may be enforced by the Babcock Ranch Commercial Association (BRCA), Babcock Ranch Community Independent Special District (BRCISD), Founders Review Committee (FRC), Florida Green Build Coalition (FGBC) Certified Professionals and/or their designated representatives.

These entities, mentioned above, bear no liability for, and expressly disclaim any responsibility arising from, the interpretation, application, or reliance upon these design guidelines. Users are solely responsible for independently determining and verifying that their designs comply with all applicable Federal, State, and local laws, regulations and codes, including but not limited to zoning ordinances, building codes, and accessibility requirements.

Special Exception: FRC reserves the authority to grant all waivers or special exceptions. The intent of these guidelines is to provide direction while encouraging ongoing coordination with the FRC and FGBC professionals throughout the architectural design process to ensure the highest-quality outcomes for Babcock Ranch.

Glossary

Babcock Overlay Zoning District (BOZD)
Babcock Ranch Community (BRC)
Design Specifications Manual (DSM)
Development of Regional Impacts (DRI)
Florida Green Build Coalition (FGBC)
Founders Review Committee (FRC)
Babcock Ranch Community Independent Special District (BRCISD)
Master Planned Development (MPD)
Babcock Ranch Commercial Association (BRCA)
Babcock Property Holdings (BPH)

References

The documents listed below, along with any additional applicable Federal, State, Local, or ISD publications not specifically identified here, take legal precedence over all design guideline content and should be reviewed to inform planning efforts.

- Babcock Ranch Community Master Development of Regional Impact (DRI)_Charlotte County
- Master Development Order (MDO)_Charlotte County
- Babcock Overlay Zoning District (BOZD) documents_Charlotte County
- Babcock Ranch Master Plan Development (MPD)_Lee County
- Charlotte County Zoning and Building Code
- Lee County Zoning and Building Code
- Florida Green Build Coalition (FGBC) Commercial Certification
- Sierra Club
- Sierra Club Settlement Agreement
- Babcock Ranch Community Independent Special District (BRCISD) Design Specification Manual (DSM)
- Babcock Ranch Commercial Association Charter
- South Florida Water Management District (SFWMD) Regulations
- Florida Department of Environmental Protection (FDEP) Regulation

Types of Commercial Development

Commercial development at Babcock Ranch encompasses a broad spectrum of business, retail, employment, and mixed-use activities that collectively enhance the community's economic vitality, walkability, and overall identity. Each commercial type serves a specific purpose within the master plan and must be designed to reflect its appropriate scale, function, and surrounding context. The classifications that follow establish a clear framework for coordinating land use, architecture, circulation, and public-realm design throughout all commercial districts.

Neighborhood Centers

Small-scale, community-serving commercial areas providing daily conveniences and essential services to surrounding residential neighborhoods. These centers typically include uses such as cafés, small retailers, personal services, neighborhood grocery, medical offices, and community-oriented amenities.

Typical Characteristics:

- One- to two-story buildings
- Walkable, pedestrian-focused environments
- Parking located behind or beside buildings
- Strong integration with residential edges, parks, and trails
- Outdoor seating, plazas, and shaded walkways

Provides convenient, accessible, and walkable destinations that strengthen the social fabric of surrounding residential areas. Architecture should be scaled appropriately, with articulated façades, porches, awnings, or shading elements that reinforce human comfort and highlight building entries. These centers should feel inviting, local, and integrated—not highway-oriented or oversized in massing.

Village Retail

Consists of small-format, community-oriented shops, cafés, services, and artisan or specialty retailers arranged within a compact, highly walkable environment. These areas function as intimate neighborhood destinations that emphasize pedestrian experience, local character, and active street life.

Typical Characteristics:

- Storefront buildings framing plazas, greens, or main streets
- Pedestrian-first design with limited front-facing parking
- Porch, canopy, or awning architectural elements
- Highly activated public realm with outdoor dining and seating
- Supports micro-retail, artisan vendors, and flexible small shops

Creates vibrant, human-scaled retail districts that support community gathering, local commerce, and daily activity. Architecture must reinforce a walkable village character through articulation, fine-grain detailing, appropriate massing, and expressive storefront design. Outdoor spaces should be comfortable, shaded, and inviting, offering opportunities for social interaction, dining, and informal events.

Types of Commercial Development (cont.)

Retail Power Centers

Large-format commercial developments anchored by mid-box and big-box retailers, complemented by multi-tenant shop buildings and outparcel pads. These centers accommodate high customer volumes, broad merchandise offerings, and automobile-oriented access while integrating pedestrian connectivity and high-quality design appropriate to Babcock Ranch.

Typical Characteristics:

- Larger building footprints and deeper sites
- Structured internal circulation systems
- Extensive parking fields broken into shaded, landscaped pods
- Outparcels placed to frame streets and soften the scale of anchors
- Heavy-duty service vehicle access and screened loading areas

Balances functional retail operations with high-quality design, sustainability, and community cohesion. Architecture must create visually unified buildings through thoughtful massing, articulated façades, consistent materials, and pedestrian-scaled details at entrances. Landscape design should mitigate the scale of large parking areas, enhance comfort, and integrate native plantings and shade

Mixed-Use Commercial Districts

Mixed-Use Commercial Districts are higher-intensity, walkable environments that combine retail, dining, office, hospitality, and residential uses within a compact development pattern. These districts function as vibrant activity centers where buildings, public spaces, and transportation networks work together to support a lively, pedestrian-oriented urban environment.

Typical Characteristics:

- Multi-story buildings with active ground floors
- Plazas, courtyards, and structured public spaces
- Strong pedestrian connectivity and multimodal circulation
- On-street parking and shared parking strategies
- Opportunities for vertical mixed-use

Dynamic community hubs, offering an immersive pedestrian experience that supports retail vitality, neighborhood services, and a high quality of urban life. Architecture must be cohesive yet expressive, with massing, materials, and detailing that reinforce Babcock Ranch's design identity. Public spaces should be inviting, shaded, and well-integrated into the movement of people throughout the district.

Office & Professional Services

Office & Professional Services include business offices, administrative workplaces, medical and professional suites, co-working environments, financial institutions, real estate services, and similar commercial uses. These facilities provide essential employment, professional services, and community support functions within Babcock Ranch's commercial and mixed-use districts.

Types of Commercial Development (cont.)

Office & Professional Services (cont.)

Typical Characteristics:

- One- to four-story buildings
- Defined frontages and formal entry features
- Landscaped edges and shaded walkways
- Organized parking fields with pedestrian connections
- Service areas located to the side or rear

Exemplify clarity, professionalism, and design quality, contributing to a cohesive built environment and enhancing the daily experience for employees and visitors. Architecture must be durable, regionally responsive, and consistent with the broader aesthetic of Babcock Ranch, using articulated façades, balanced massing, and appropriate shading elements.

Hospitality & Lodging

Hospitality & Lodging includes hotels, inns, resorts, boutique lodging, extended-stay facilities, conference accommodations, and visitor-serving hospitality uses. These developments support tourism, business travel, community events, and recreational activity within Babcock Ranch.

Typical Characteristics:

- Prominent architectural massing at visible corners or gateways
- Integrated plazas, drop-offs, and outdoor amenities
- Structured or shared parking strategies
- Strong landscape and open-space frameworks
- Front-of-house and back-of-house separation

Function as signature destinations that enhance the character and vibrancy of Babcock Ranch. Architecture must convey quality, comfort, and a welcoming identity through articulated façades, thoughtful massing, and regionally appropriate materials. Outdoor spaces—such as pools, patios, plazas, and shaded gathering areas—should showcase the natural Florida environment while providing comfortable, climate-responsive experiences for guests.

Light Industrial with Office Components

Light Industrial with Office Components includes employment-oriented uses such as research and development facilities, technology and fabrication spaces, clean light manufacturing, logistics support, laboratories, distribution spaces, and hybrid industrial-office workplaces. These developments combine functional industrial operations with administrative, professional, or customer-facing office areas.

Typical Characteristics:

- Larger footprints with clear separation of public/office areas and industrial functions
- Dedicated truck courts, screened loading areas, and heavy-duty circulation
- Enhanced architectural expression on office-facing elevations
- Generous landscape buffers at public edges
- Flexible site layouts for varied tenant needs

Types of Commercial Development (cont.)

Light Industrial with Office Components (cont.)

Balances functionality, visual quality, and community compatibility. While industrial activities must operate efficiently, the architectural character—especially at public-facing elevations—should reflect the high design standards of Babcock Ranch. Office elements should be prominently expressed to create a professional frontage, while industrial portions must be visually minimized through massing, façade articulation, and landscape screening.

Civic & Institutional

Civic-oriented commercial facilities such as health centers, cultural venues, community services, and educational or nonprofit institutions.

Typical Characteristics:

- High-visibility sites with strong architectural identity
- Public gathering areas, plazas, and shaded seating
- Enhanced pedestrian infrastructure
- Clear and legible building entries
- Integration with open space and civic landscapes

Civic commercial uses must reinforce Babcock Ranch's identity, promote community engagement, and serve as anchors for district character.

Places of Worship

Places of Worship include faith-based facilities such as churches, temples, synagogues, mosques, and multi-purpose religious centers that serve as spiritual, cultural, and community anchors within Babcock Ranch. These uses may include sanctuaries, fellowship halls, classrooms, administrative spaces, social-service areas, and outdoor gathering spaces.

Typical Characteristics:

- Architecturally significant buildings positioned on prominent or visible sites
- One- to three-story structures with identifiable entries and gathering spaces
- Landscaped plazas, courtyards, or worship greens that support community use
- Parking positioned to the side or rear to emphasize pedestrian-oriented frontage
- Drop-off zones designed for safe circulation during peak arrival and departure times
- Access designed to accommodate large-assembly events and periodic high-volume traffic

Welcoming, inclusive, and dignified community landmarks that contribute to the architectural diversity and cultural life of Babcock Ranch. Their design must balance spiritual character with environmental responsibility, walkability, and compatibility with surrounding neighborhoods and commercial areas. Buildings and grounds should provide shade, landscape comfort, safe multimodal access, and gathering areas that reinforce the community's vision of sustainability and human connection.

Types of Commercial Development (cont.)

Multifamily / Rental Properties

Multifamily and rental properties include apartment communities, stacked flats, townhome-style rentals, mixed-use residential buildings, and long-term rental housing integrated into commercial districts. These developments provide diverse living options that support workforce housing, neighborhood vitality, and walkable access to services and amenities.

Typical Characteristics:

- Two- to five-story buildings depending on location and increment
- A variety of unit types, including studios, apartments, and townhomes
- Shared amenities such as courtyards, clubhouses, pools, co-working spaces, and recreation lawns
- Strong pedestrian orientation with shaded sidewalks, internal walkways, and trail connections
- Structured parking, podium parking, or screened surface lots
- Defined building frontages with active ground-floor uses in mixed-use locations
- Landscaped open spaces for social gathering and recreation

Creates high-quality, human-scaled residential environments that reinforce Babcock Ranch's walkable, sustainable, and community-oriented character. Architectural styles must reflect cohesive massing, articulated façades, and a thoughtful relationship to streets and public spaces. Landscape design should prioritize shade, comfort, and native plantings to support resilient outdoor living.

Storage Facilities

Storage Facilities include self-storage centers, climate-controlled storage buildings, and mixed-use storage complexes that provide secure personal or commercial storage solutions. These facilities may include multi-story indoor storage, drive-up units, or hybrid formats incorporating retail or office components related to storage operations.

Typical Characteristics:

- One- to four-story buildings depending on district and visibility requirements
- Highly organized circulation systems designed for safe customer and service-vehicle access
- Minimal storefront activity, with limited public-facing functions such as leasing offices or retail counters
- Architectural treatments and screening elements that reduce visual scale
- Enhanced landscape buffers along public roadways, mixed-use districts, and residential edges
- Secure perimeter systems, including fencing, access gates, and controlled entry points
- Service areas sited discreetly to minimize operational and aesthetic impacts

Provides high-quality, low-impact, and visually cohesive development that aligns with the broader character of Babcock Ranch. These buildings should be durable, secure, and operationally efficient while maintaining appropriate architectural expression along public-facing elevations. Landscaping, massing strategies, and façade articulation should reduce visual bulk, enhance compatibility with adjacent uses, and preserve the community's walkable, environmentally conscious identity.

Types of Commercial Development (cont.)

Medical Facilities

Medical Facilities include clinics, urgent care centers, medical offices, outpatient treatment centers, specialty practices, diagnostic labs, rehabilitation facilities, wellness centers, and supporting health-service uses. These facilities provide essential healthcare access to residents and visitors and may serve as anchors within commercial or mixed-use districts.

Typical Characteristics:

- One- to four-story buildings depending on service type and district context
- Clearly defined patient drop-off areas with safe, accessible circulation
- Purpose-designed entrances for patients, staff, and emergency vehicles
- High parking demand relative to building size, with ADA-priority placement
- Screening and separation of service functions such as ambulance bays, loading, waste handling, and mechanical systems
- Architectural expression emphasizing clarity, wayfinding, transparency, and durability
- Landscaped buffers and shaded pedestrian routes connecting to sidewalks and transit

Welcoming, accessible, and high-quality environments that reflect Babcock Ranch's commitment to community well-being and sustainable design. Architecture should convey clarity, professionalism, and comfort through articulated façades, well-proportioned massing, and transparency at primary entries. Site design must prioritize patient safety, multimodal access, shaded waiting areas, and efficient internal circulation.

BRCISD Approval Process

Introduction

This document serves as a resource for planners and designers to ensure consistency and alignment across all commercial development within Babcock Ranch. The BRCISD is responsible for verifying that submitted construction documents comply with the BRCISD Design Specifications Manual. The FGBC Consultant ensures that all construction meets or exceeds the requirements for FGBC Bronze certification, while the FRC Consultant reviews each submittal to confirm compliance with landscaping standards and to ensure that architectural design, color, and materials align with Babcock Ranch's established aesthetic criteria.

Review Process

The following is the BRCISD submittal review process for all construction projects within Babcock Ranch.

Pre-Construction Meeting

- The BRCISD, developer and design professionals meet to clarify the process and discuss conceptual designs to include horizontal planning.

Site Development Plan (SDP) Review

- BRCISD, FGBC, and FRC consultants evaluate the civil site plan, enhanced landscape plan, and FGBC commercial checklist for consistency with the Design Specifications Manual and all applicable standards.

Commercial Lot Site Plan Review

- The BRCISD reviews the building site plan comparatively with the approved SDP.
- The FRC reviews all building elevations with proposed colors and materials, and verifies enhanced landscape plans to ensure integrity and compliance.
- The FGBC Commercial checklist is reviewed to ensure the *minimum* Bronze certification requirement is met.

Site Inspection Review

- Site inspections will be conducted, by the BRCISD, throughout the course of the development to ensure compliance with approved plans
- The BRCISD, FGBC and FRC conducts a final walkthrough to ensure substantial completion and compliance, prior to turnover and receipt of Certificate of Occupancy

Vision & Sustainability Guiding Principles

Commercial development at Babcock Ranch is envisioned as a model for sustainable, resilient, and high-performing community design. Babcock Ranch sets a national benchmark for how commercial environments can support economic vitality while remaining walkable, climate-responsive, and deeply connected to place.

The vision is to create commercial districts that function as active, welcoming destinations—supporting daily needs, employment, and social interaction—while reinforcing long-term environmental responsibility and design excellence. Buildings, sites, and public spaces must work together to form a cohesive commercial fabric that enhances quality of life and reflects the community's identity rooted in Innovation, Technology, and Sustainability.

Environmental Stewardship

Protect and enhance natural systems through responsible site planning, preservation of ecological features, and integration of native and adaptive landscaping that supports biodiversity and long-term environmental health.

Energy Efficiency & Renewable Integration

Reduce energy demand through efficient building orientation, high-performance envelopes, shading, and daylighting. Commercial buildings should be solar-ready and support renewable energy systems that advance the community's clean-energy mission.

Walkability & Human Comfort

Create pedestrian-first environments that encourage walking and outdoor activity. Buildings and sites must provide shade, seating, clear wayfinding, and safe, intuitive connections between uses, parking areas, and public spaces.

Resilient & Climate-Responsive Design

Design for durability and adaptability in response to Southwest Florida's climate. Buildings and landscapes must withstand extreme weather, manage heat, and recover quickly from storm events through resilient materials and systems.

Integrated Land Use & Compact Development

Promote efficient land use through compact development patterns, shared parking strategies, and mixed-use opportunities. Commercial sites should activate public frontages and reduce unnecessary impervious surfaces.

Mobility & Reduced Emissions

Support multimodal transportation by integrating pedestrian paths, bicycle facilities, golf-cart circulation, and future-ready mobility infrastructure. Reduce reliance on single-occupancy vehicles through connectivity and thoughtful site planning.

Innovation & Technology

Embrace innovation through smart-building systems, efficient infrastructure, and forward-thinking technologies that enhance performance, monitoring, and adaptability over time.

Sustainability & Performance Requirements

Sustainability and high-performance design are foundational expectations for commercial development at Babcock Ranch. As a community built on principles of environmental stewardship, resiliency, and technological innovation, all projects must incorporate strategies that reduce resource consumption, enhance ecological health, and ensure long-term operational efficiency. The following requirements establish minimum performance standards across site planning, architecture, landscape, and building systems.

Energy Efficiency & Building Performance

- Buildings must integrate energy-efficient design strategies, including high-performance envelopes, optimized orientation, and solar-shading devices.
- Mechanical, electrical, and plumbing systems must prioritize energy conservation and minimize lifecycle impacts.
- Roof structures should be designed to accommodate photovoltaic systems or be designated as solar-ready.
- Daylighting, natural ventilation (where feasible), and high-efficiency glazing should be used to reduce indoor energy loads.

Florida Green Building Coalition (FGBC) Compliance

- All commercial projects must comply with Florida Green Building Coalition (FGBC) Commercial Bronze Certification or higher.
- The FGBC Commercial Checklist must be submitted as part of the design review process and updated throughout the project lifecycle.
- Designers must incorporate FGBC-aligned strategies—such as improved indoor air quality, energy and water efficiency, and responsible materials—to meet certification requirements.

Water Conservation & Stormwater Integration

- Potable water use for landscaping is strictly prohibited. Reclaimed minimized through native plant selection, efficient irrigation systems, and elimination of non-functional turf.
- Low-Impact Development (LID) strategies such as bioswales, rain gardens, permeable pavements, and vegetated swales must be integrated into site planning.
- Stormwater systems should serve as visible and functional landscape amenities that support filtration, infiltration, and water-quality enhancement.

Material Efficiency & Sustainable Construction Practices

- Projects must use durable, low-maintenance materials suited to the Southwest Florida climate.
- Preference should be given to materials with recycled content, low embodied carbon, and long service life.
- Construction activities must follow best practices for waste reduction, recycling, pollution prevention, and soil protection.

Sustainability & Performance Requirements (cont.)

Heat-Island Reduction & Outdoor Comfort

- Shading elements—including canopy trees, architectural overhangs, and covered walkways—must be integrated to reduce heat exposure and improve pedestrian comfort.
- Light-colored, high-albedo paving materials are encouraged to reduce surface temperatures in parking lots, plazas, and walkways.
- Outdoor gathering areas should incorporate shade, seating, and native planting to create comfortable microclimates year-round.

Resilient Design & Climate Adaptation

- Buildings must be designed to withstand regional climate challenges, including high winds (Category V), heavy rainfall, and extreme heat.
- Critical systems and utilities must be protected, elevated, or otherwise safeguarded to ensure continuity during and after severe weather events.
- Landscape designs must use resilient, native species capable of tolerating seasonal fluctuations, storm events, and varying soil conditions.
- Flood-prone areas must incorporate naturalized stormwater management strategies to mitigate risk and enhance ecological function.

Mobility, Connectivity & Emissions Reduction

- Projects must support multimodal transportation options, including pedestrian paths, bicycle facilities, golf-cart circulation, and future mobility technologies.
- EV charging stations or EV-ready infrastructure are strongly encouraged within commercial parking areas.
- Parking design must reduce unnecessary pavement, encourage shared parking strategies, and prioritize pedestrian connectivity.

Long-Term Operational Performance

- Maintenance plans must be provided for landscape areas, stormwater features, and building systems to preserve long-term sustainability goals.
- Lifespan and replacement analysis should be considered in material selection and system design to reduce lifecycle environmental impacts.
- Property owners and operators are encouraged to track water use, energy consumption, waste generation, and maintenance outcomes to support continual improvement.

Summary

These Sustainability & Performance Requirements ensure that every commercial project at Babcock Ranch delivers environmental, economic, and community benefits. By embedding high-performance strategies into design, construction, and operation, Babcock Ranch continues to exemplify its commitment to Innovation, Technology, and Sustainability.

Land Use and Site Planning

Land use and site planning form the foundation of successful commercial development at Babcock Ranch. As America's first solar-powered town and a leader in sustainable, master-planned communities, Babcock Ranch relies on thoughtful planning to ensure that commercial projects are well integrated, highly functional, and supportive of a walkable, resilient environment.

Commercial site planning must respond to the intended land use, district context, and surrounding development while reinforcing the community's broader planning framework. Buildings, circulation systems, open spaces, and service functions should be arranged to enhance pedestrian comfort, promote multimodal connectivity, and activate public frontages. At the same time, operational needs—such as parking, loading, solid waste, and emergency access—must be efficiently accommodated without detracting from the public realm.

Land Use & Site Planning provides direction for organizing commercial sites in a manner that supports economic vitality, environmental performance, and long-term adaptability. By aligning development patterns with Babcock Ranch's vision for Innovation, Technology, and Sustainability, each project contributes to a cohesive, high-quality commercial environment that strengthens the overall character and livability of the community.



Land Use and Site Planning

High Profile Use

Experiential Retail: Food and Beverage, Places of Worship, Civic Buildings, Educational Buildings, Headquarters Offices, Hospitality and Hospitals

Importance

- Highly desirable uses to the community and portray rooted values and Babcock Ranch pride

Strong Visibility

- *Strong street frontage and architectural presence, pedestrian connectivity and positive integration with adjacent context*

Parking

- Creates a variety of parking options that correspond to user groups and needs. Prevent large parking areas where possible

Medium Profile Use

Retail Centers, Rental Communities, Office Campuses and Research Facilities, Hospitality Retreats, and Medical Practitioners Offices.

Importance

- These uses are either more land consumptive or may not have strong integration with community fabric beyond specific moments or facilities. These may be clubhouses, welcome centers or the entrance arrivals into the developments recommend positive relationships to the adjacent context.

Partially Buffered Visibility

- Provides additional buffering and screening of services to create a sense of privacy

Parking

- Should be distributed around site to allow proper walkability. Mitigate visibility where possible.

Low Profile Use

Large format retail, Self-Storage and Light Industrial

Importance

- *While important to the overall success of Babcock Ranch, these uses trend to be unsightly with low community activation. These uses may be further removed from public activation than others. This does not mean site planning standards are to be ignored.*

Fully Buffered

- These uses utilize larger landscape buffers and dense vegetation where possible

Parking

- Should be distributed around site to allow proper walkability. Mitigate visibility where possible.

Solid Waste Access and Circulation

Commercial site planning must prioritize safe circulation, efficient service access, sustainable design practices, high-quality public edges, and full compliance with the BRCISD Design Specifications Manual. The following requirements establish the minimum standards for layout, access, solid waste service, and functional site organization across all commercial development types.

Lee County Projects must reference Lee County Zoning Code, Charlotte County Projects must reference the BRCISD DSM for compliance

Dumpster Enclosure Design Principles

- Dumpster enclosure locations must be clearly identified and labeled on the site plan (DSM Solid Waste Section, p. 3)
- All site plans must include a solid waste truck routing plan showing clear access from the collector road to every enclosure location
- Plan submittals must include scaled detail blow-ups showing drive aisle widths, clearances, dumpster dimensions, and turn radii at no larger than 1" = 30'
- Dumpsters may not be placed beneath overhead structures, canopies, or wires; a minimum 10-foot offset is required from any overhanging element
- Collection vehicle circulation must allow forward vehicle entry and forward vehicle exit, with backing movements restricted to container servicing only

Auto-turn Principles

- AutoTURN or equivalent turning movement diagrams must be provided for each enclosure to demonstrate unobstructed maneuvering
- 60 feet of clear space must be provided directly in front of service or enclosure locations to allow safe maneuvering
- All turns along the collection route must maintain a minimum 50-foot turning radius free of obstructions

Typical Collection Truck Dimensions (approximate)	
Length	10.0 m - 12.4 m
Width	3.2 m
Minimum inside turning radius	10.0 m
Minimum outside turning radius	12.8 m
Height clearance	6.5 m - 7.5 m
Width clearance	4.0 m
Length clearance	15.2 m

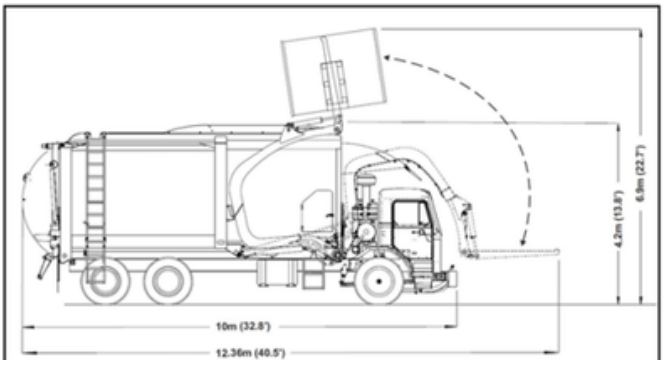

Emergency Access and Circulation

Site plans shall be designed to meet the requirements of the Babcock Ranch Community Independent Special District (ISD), Charlotte or Lee County Fire & EMS, the Florida Fire Prevention Code (FFPC), and all applicable engineering standards. These requirements ensure that emergency responders can reach all buildings quickly, maneuver effectively, and operate safely during fire, medical, and public-safety events.

General *Design Principles*

- *E*mergency access must be integrated early in site planning and maintained through all stages of design, construction, and operation
- All buildings must be accessible by fire apparatus at all times, without obstruction from vehicles, landscaping, gates, walls, outdoor dining, or equipment.
- Emergency routes shall remain fully open and unobstructed, with no parking, storage, loading, or blocking elements.

Auto-turn Principles

- Demonstration that emergency access does not conflict with: Solid-waste truck access, Loading/Service Zones or Parking and Queuing Areas

The following fire apparatus specifications should be utilized to analyze the site specific needs for emergency access.

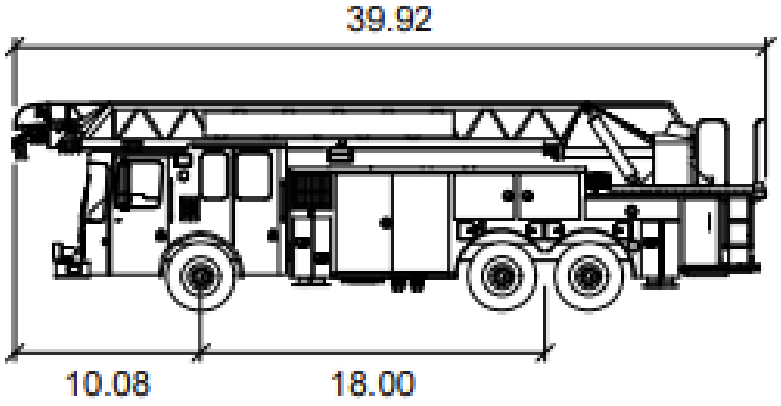

Smeal Aerial RM 100ft

	feet
Width	: 8.33
Track	: 7.92
Lock to Lock Time	: 6.0
Steering Angle	: 45.0

Architectural Guiding Principles

Architecture at Babcock Ranch must reflect the community's commitment to sustainability, resiliency, and high-quality placemaking. These guiding principles provide a framework for creating buildings that are cohesive, human-scaled, climate-responsive, and supportive of walkability. All architecture should embody the community's commitment to Innovation, Technology and Sustainability.

Celebrate Human Scale and Walkability

Buildings must be designed to enhance the pedestrian experience, emphasizing proportion, detail, and features that engage people at street level.

- Use articulated façades, shading devices, porches, and glazing to create inviting edges.
- Avoid blank walls and monotonous massing along public frontages.

Integrate Sustainability and Climate Responsiveness

Architecture should incorporate passive and active strategies that reduce environmental impact and improve building performance.

- Prioritize shading, natural daylighting, and ventilation where appropriate.
- Use durable, energy-efficient materials and solar-ready roof designs.

Reinforce a Cohesive Architectural Identity

While creativity is encouraged, all buildings must contribute to a visually unified environment throughout Babcock Ranch.

- Maintain consistency in massing, materials, roof forms, and color palettes across districts.
- Align design character with the community's contemporary Florida vernacular aesthetic.

Promote High-Quality Materials and Craftsmanship

Buildings must be constructed with resilient, low-maintenance materials appropriate to the Florida climate.

- Use high-performance cladding, long-lasting finishes, and corrosion-resistant components.
- Apply materials authentically and with attention to detail.

Strengthen the Public Realm

Architecture should frame streets, plazas, and open spaces to support social interaction and community life.

- Orient primary façades and entries toward public spaces.
- Integrate outdoor seating, arcades, canopies, and landscape elements that enhance comfort.

Ensure Clear Wayfinding and Legible Design

Buildings should be intuitive and welcoming, with clearly defined entrances and organized circulation.

- Highlight entries through massing, lighting, and architectural features.
- Use signage and glazing patterns to support visual clarity and navigation

Architectural Guiding Principles (cont.)

Support Flexibility and Long-Term Adaptability

Commercial buildings must accommodate evolving uses, technologies, and tenant needs over time.

- Provide adaptable floor plates, flexible storefront systems, and future-ready infrastructure.
- Design façades and structural systems that allow for expansion or reconfiguration.

Minimize Visual Impact of Service Functions

Back-of-house functions should be screened and integrated discreetly into the overall design.

- Locate loading, waste facilities, and mechanical equipment away from primary frontages.
- Use architectural walls, landscaping, and material continuity to maintain visual quality.

Enhance Connectivity and Multimodal Access

Architectural design must reinforce Babcock Ranch's walkable and multimodal framework.

- Position entries to align with sidewalks, trails, and mobility paths.
- Provide safe, shaded, and intuitive transitions between indoor and outdoor spaces.

Reflect Innovation, Technology, and Resiliency

Architecture should express the forward-thinking character of Babcock Ranch.

- Incorporate smart-building systems, renewable energy infrastructure, and resilient design strategies.
- Use contemporary forms and details that reinforce the community's pioneering identity.

Development Areas & Architectural Styles

Babcock Ranch is divided into 3 visually distinct districts that reflect the historical and aspirational goals of the development. Guidelines may evolve to reflect specific geographic and environmental needs. These districts align with the Development of Regional Impact (DRI) Increments for Charlotte County as well as the Master Planned Development (MPD) for Lee County. The following map dictates the divide between these three areas.

Regardless of increment, all commercial development at Babcock Ranch must uphold the following core principles:

- Pedestrian-first site design with shaded, comfortable walking environments
- Architectural excellence rooted in a modern interpretation of Florida vernacular
- Climate-appropriate materials and resilient construction
- Native landscaping and integrated open space that connect to the broader ecological network
- Efficient, screened service and utility areas
- Consistent signage, lighting, and streetscape quality
- Strong coordination with sustainability standards, including energy-efficient design and Low Impact Design strategies
- Florida Green Build Coalition certification (minimum Bronze)

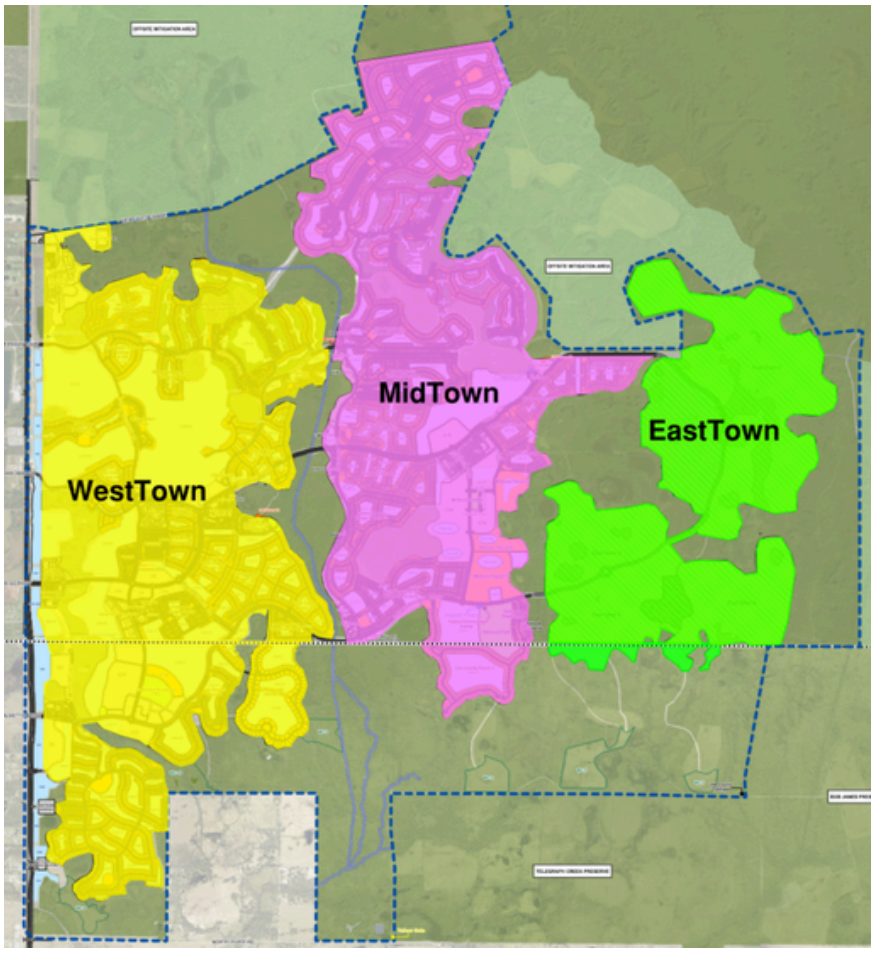

WestTown Architectural Design Principles

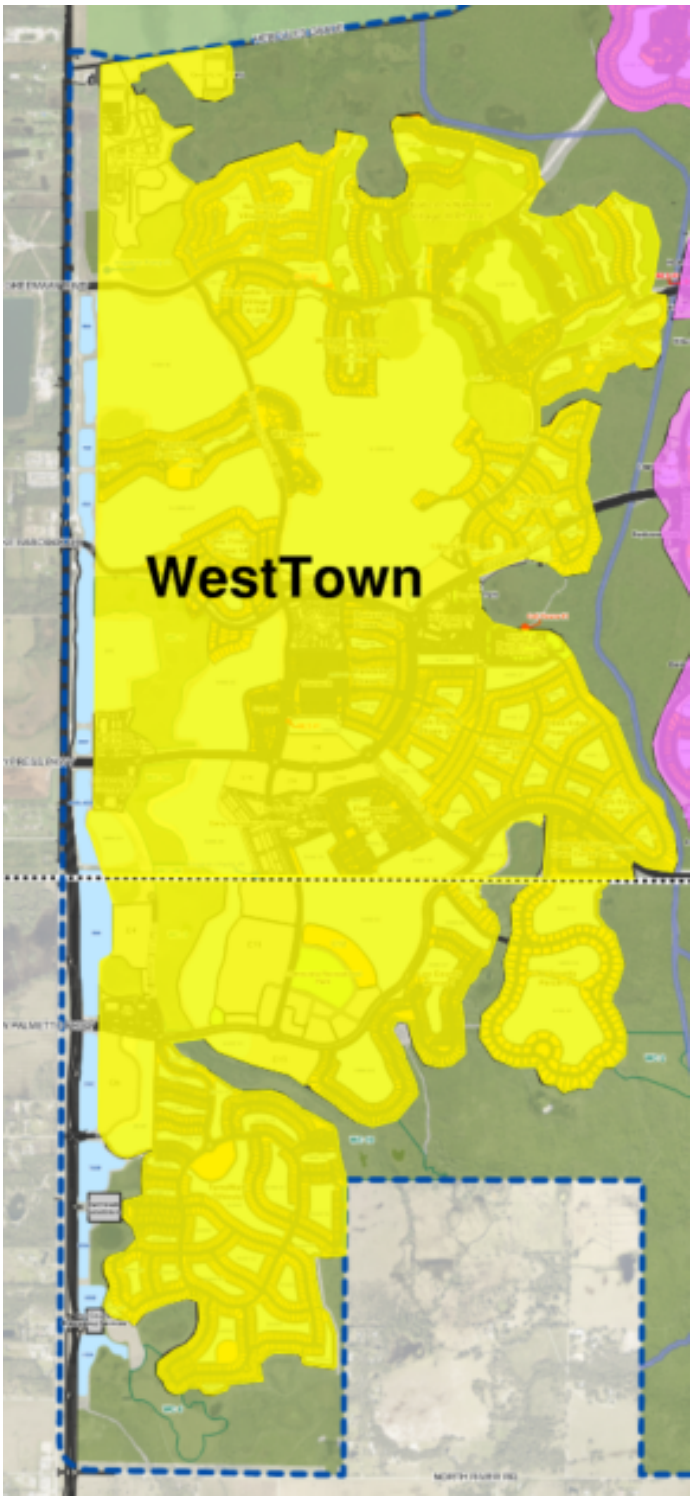

WestTown Design Principles

WestTown (DRI Increment 1) reflects the foundational architectural character of Babcock Ranch's early commercial development. Buildings within this district must reinforce a welcoming, neighborhood-oriented commercial environment rooted in the community's Florida vernacular influences, sustainability values, and commitment to high-quality design. Architecture should be human-scaled, climate-responsive, and closely connected to the surrounding residential neighborhoods, parks, and open space systems.

Character & Sense of Place

Architectural character is defined by simplicity, authenticity, and a strong connection to the landscape.

- Emphasize modern interpretations of Florida vernacular architecture that balance traditional proportions with contemporary detailing
- Buildings should convey a warm, community-focused identity appropriate for a neighborhood-serving commercial district
- Architectural variety is encouraged, but all buildings must contribute to a cohesive streetscape and harmonious visual environment

Sustainability & Resilience

- Incorporate energy-efficient design strategies such as shading, natural ventilation, and strategic building orientation
- Use materials compatible with Florida's heat, humidity, and wind conditions
- Integrate native landscaping, Low Impact Design strategies, and green infrastructure
- Solar-ready or renewable energy features

Pedestrian-Oriented Streetscapes

- Orient buildings toward streets, plazas, and open spaces rather than parking areas
- Provide architectural shading, comfortable seating zones, and pedestrian-scaled lighting
- Integrate façade-level detailing—such as signage bands, tactile materials, and low windows—to enhance street-level engagement

Roof Forms & Screening

- Encourage pitched roofs, gabled forms, or parapets with subtle articulation aligned with Florida vernacular influences
- Integrate deep overhangs, canopies, or awnings to provide shading and reduce solar heat gain
- All rooftop mechanical equipment must be fully screened through parapets or architecturally integrated elements

Façade Design & Articulation

- Provide regular façade articulation using windows, awnings, recesses, projections, and material transitions
- Establish a consistent rhythm along public frontages to support walkability and visual interest
- Avoid blank walls along streets, walkways, or open spaces
- Entrances must be clearly identifiable and oriented toward primary pedestrian routes

MidTown Architectural Design Principles

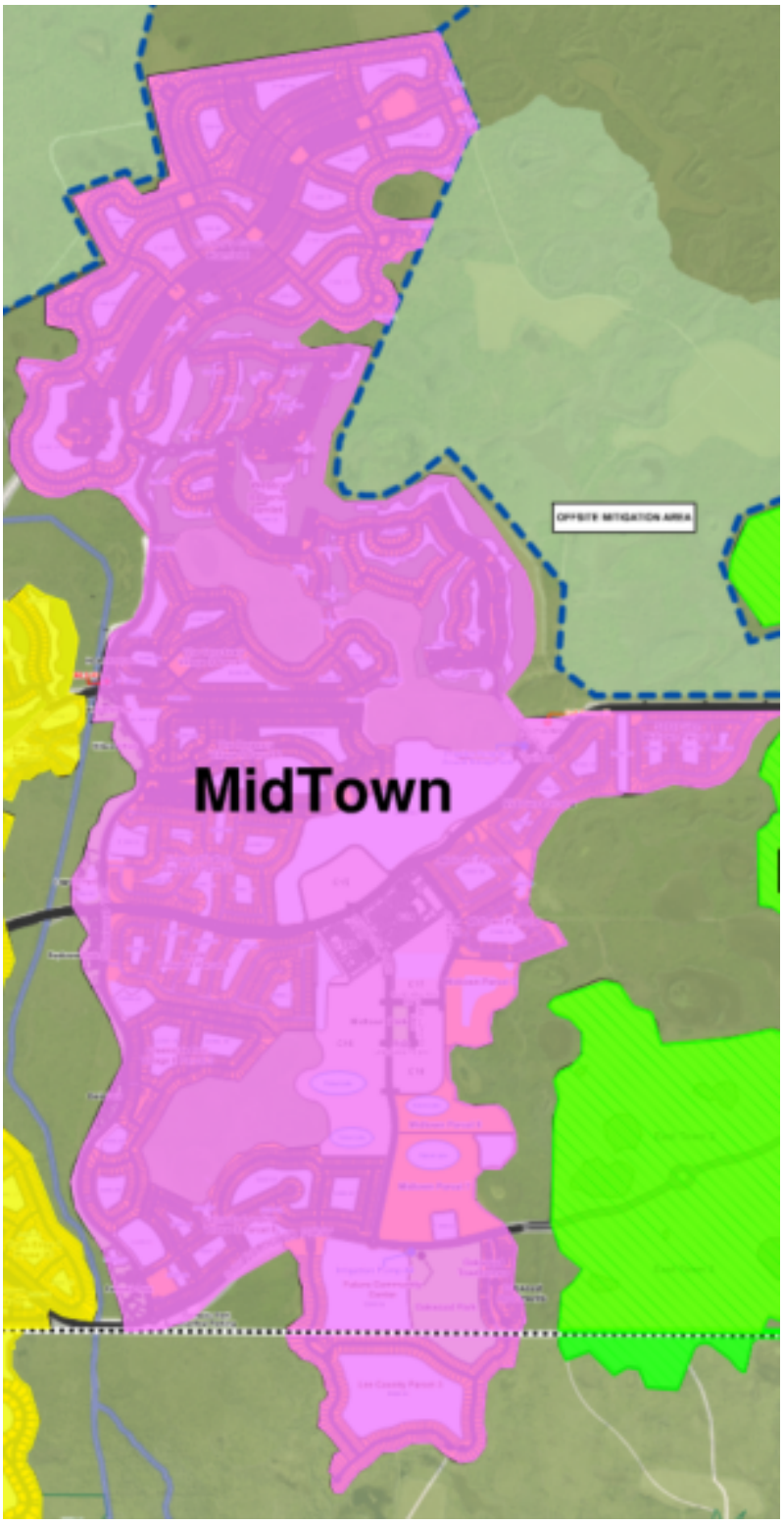

MidTown Design Principles

Midtown serves as the “Downtown” and urban heart of Babcock Ranch. Emphasizing multi-story development, walkability, and integrated public spaces, Midtown supports economic growth and community life through a diverse mix of employment, education, retail, dining, mixed-use development, and civic activity.

Development in Midtown should express a distinctly urban character defined by compact site planning, vertical massing, active street edges, and strong connections between buildings and public spaces. Architecture, landscape, and infrastructure must work together to create a vibrant, all-day environment that balances density and intensity with pedestrian comfort and high-quality design.

Urban Density & Vertical Development

Prioritize multi-story buildings to support increased density and efficient land use. Vertical mixed-use development is encouraged, with ground-floor commercial uses and office, residential, or hospitality uses above. Building height and density should reinforce Midtown’s role as an urban center while maintaining appropriate transitions to adjacent districts.

Integrate Structured & Shared Parking

Surface parking should be limited in Midtown. Structured parking, podium parking, and shared parking strategies are strongly encouraged to support density and reduce land devoted to parking. Parking structures must be architecturally integrated and screened from public view with active uses, liner buildings, or façade treatments.

Prioritize Walkability & Multimodal Access

Must support a pedestrian-first environment with wide sidewalks, shaded walkways, safe crossings, and intuitive connections to trails, transit, bicycle facilities, and golf-cart routes. Streets should be designed as complete streets that balance vehicles, pedestrians, and alternative mobility modes.

Create a Network of Public Spaces

Plazas, courtyards, greens, and streetscapes should be integrated throughout Midtown to provide gathering spaces, visual relief, and social activity. Buildings should frame these spaces to create defined outdoor rooms that are activated by adjacent uses.

Architectural Cohesion with Urban Expression

Architecture in Midtown should be contemporary, refined, and urban in character while remaining consistent with Babcock Ranch’s overall architectural language. Materials, proportions, and detailing should convey permanence, quality, and innovation.

EastTownArchitectural Design Principles

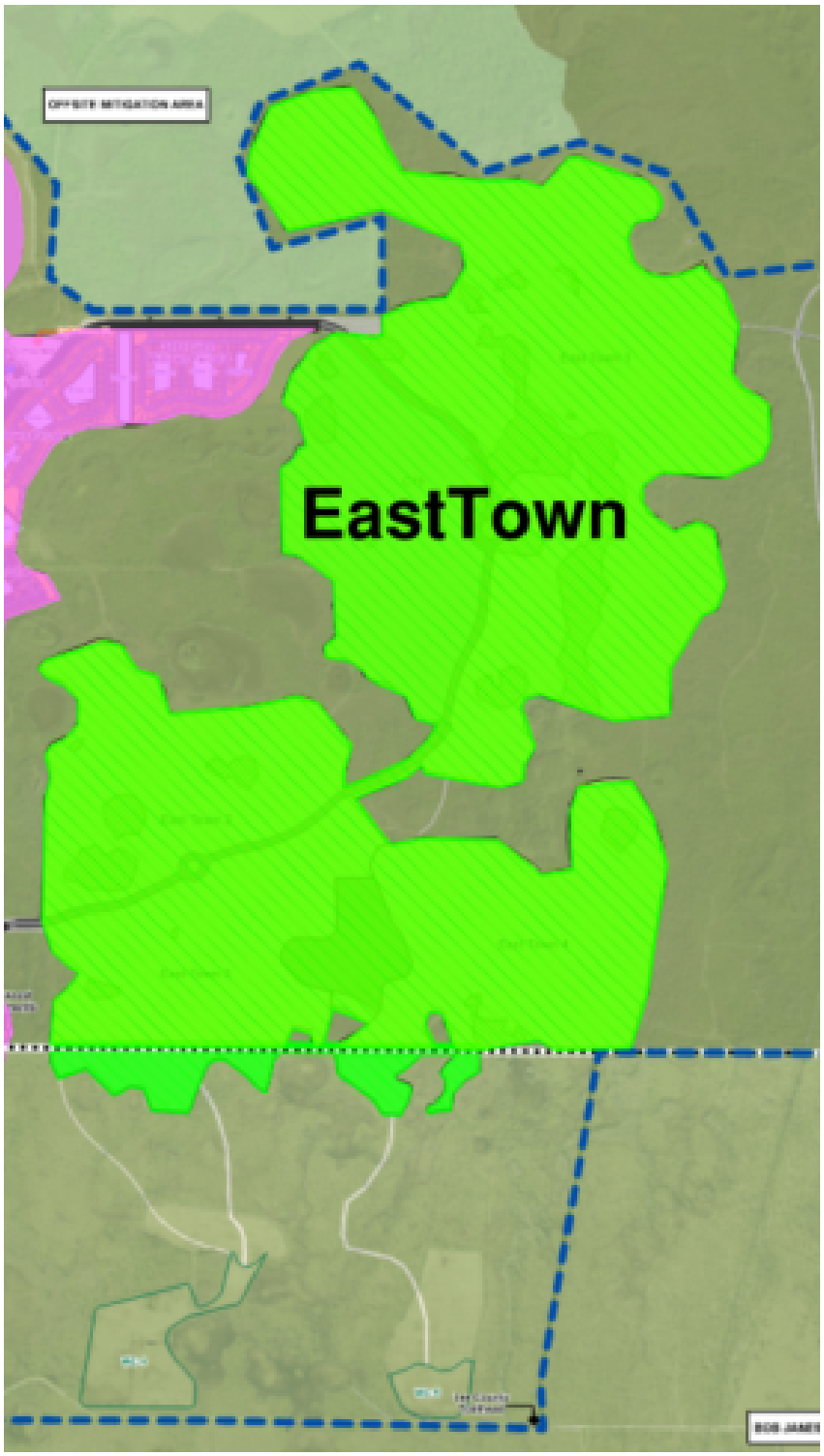

EastTown Design Principles

EastTown (DRI Increment 3) is envisioned as a place where development is carefully integrated with the natural landscape and existing ecological systems of Babcock Ranch. Guided by a strong sense of place and a commitment to preservation, EastTown balances growth with environmental stewardship, creating a distinctive district rooted in the character, history, and natural beauty of the land that reinforces Babcock Ranch's commitment to Innovation, Technology, and Sustainability.

EastTown's role is to accommodate commercial and mixed-use development in a manner that respects surrounding preserves, waterways, and open spaces. Architecture, site planning, and landscape design must reinforce this relationship—creating a district that feels grounded, authentic, and uniquely connected to its setting.

Character & Sense of Place

Development in EastTown must respond directly to its environmental and cultural context. Building forms, materials, and site organization should draw inspiration from the natural landscape, regional architecture, and the rural-to-urban transition that defines this area of Babcock Ranch.

Preservation of Natural Systems

Preservation of existing natural features—such as wetlands, tree canopies, waterways, and wildlife corridors—must guide all planning and design decisions. Development should be clustered and compact where appropriate to minimize disturbance and maintain large, contiguous open-space areas.

Quiet Activation & Community Use

Public spaces in EastTown should support low-impact, community-oriented activities such as outdoor seating, small gatherings, and educational or interpretive features. Programming should reinforce a sense of calm, stewardship, and connection to nature.

Walkability & Connectivity

Pedestrian circulation should be woven into the landscape, with shaded pathways, boardwalks, and trail connections that link buildings to open spaces, greenways, and adjacent districts. Movement through EastTown should feel intuitive and immersive rather than vehicular-dominated.

Integration with Open Space & Landscape

Buildings should be sited to frame, overlook, and connect to open spaces rather than displacing them. Landscapes must transition seamlessly between developed areas and preserved lands, using native plantings and naturalized edges to soften boundaries.

Spine Roads

Spine Roads are primary internal corridors within Babcock Ranch that provide critical connectivity between commercial districts, neighborhoods, civic destinations, and regional access points. While they serve an important mobility function, Spine Roads are designed first and foremost as complete, context-sensitive streets that support walkability, safety, and community character rather than high-speed vehicular movement.

Spine Roads must balance efficient circulation with a strong pedestrian experience, reinforcing Babcock Ranch's identity as a walkable, sustainable, and people-oriented community.

Maximum Speed

- Speed limits must not exceed the maximum speed of 25 miles per hour (mph).
- Road geometry, traffic circles (roundabouts), streetscape design, and intersection treatments must reinforce this speed through visual and physical cues rather than reliance on signage alone.

Traffic-Calming Strategies

Spine Roads should incorporate design elements that naturally slow traffic, including:

- Narrowed travel lanes appropriate for the context
- On-street parking where feasible
- Frequent intersections and pedestrian crossings
- Raised crosswalks or textured paving at key locations
- Street trees and vertical streetscape elements that create enclosure
- Traffic Circles (roundabouts) will be utilized to ensure continuous traffic flow and as a calming strategy. Traffic lights *will only* be implemented as a necessity.

Pedestrian Priority & Safety

- Wide sidewalks and shared-use paths must be provided along Spine Roads to support high pedestrian activity.
- Frequent, highly visible crossings are required near commercial frontages, plazas, and transit stops.
- Lighting, landscape, and street furnishings should enhance visibility and comfort without creating obstructions.

Access Management

- Driveway access along Spine Roads should be limited and consolidated to reduce conflicts.
- Shared access points and internal circulation are encouraged for adjacent parcels.
- Intersections must be designed for clear sightlines, safe turning movements, and pedestrian visibility.

Parking

Parking within Babcock Ranch is designed to balance functional access, community character, and the town's sustainability and walkability goals. Commercial parking areas must be thoughtfully planned to support visitor and employee needs while reinforcing the community's emphasis on pedestrian comfort, native landscaping, and high-quality urban design.

Well-designed commercial parking at Babcock Ranch supports more than vehicle storage—it contributes to the community's identity, enhances safety and comfort, and integrates seamlessly with the town's broader sustainability and mobility framework. Parking areas should be attractive, shaded, walkable, and thoughtfully coordinated with surrounding development to uphold the high-quality character of Babcock Ranch.

Location & Configuration

- Parking should be located behind or beside buildings whenever possible to maintain strong street frontage along Spine Roads and other primary corridors
- Large uninterrupted fields of parking are discouraged. Lots should be broken into smaller pods with landscaped islands, pedestrian walkways, and drive aisles that create an organized, human-scaled environment
- Corner parcels and highly visible sites may require enhanced screening or structured parking solutions to maintain architectural presence
- 1.5% EV minimum parking is required within Babcock Ranch
- A minimum maintained illuminance of 3.0 foot-candles shall be provided throughout all parking lot areas, including drive aisles, parking stalls, and pedestrian pathways.

Shared & District Parking

- Shared parking between adjacent uses is strongly encouraged to reduce the overall paved footprint and support walkability within mixed-use and commercial districts
- Where feasible, developments should connect internal drive aisles and pedestrian routes to adjacent parcels to support cross-access and shared parking efficiency

Pedestrian Connectivity

- All parking areas must incorporate a clear, safe pedestrian network linking parking pods, sidewalks, building entrances, and transit or trail connections
- Pedestrian paths should be direct, shaded, and designed with materials or markings that clearly distinguish them from vehicular areas

Parking (cont.)

Landscaping & Shade

- Parking lots must include significant native landscaping to provide shade, reduce heat gain, and reinforce the natural character of Babcock Ranch
- Landscape islands should be appropriately sized to support tree growth—not merely decorative—and distributed to break up parking fields
- Perimeter buffers should soften views of parking from public roadways and adjacent developments

Sustainability & Stormwater

- Parking design should incorporate low-impact development strategies such as bioswales, rain gardens, or permeable surfaces where appropriate
- Stormwater management features should integrate into the site plan as visible landscape amenities rather than utilitarian basins
- Lighting should meet dark-sky–friendly standards and employ energy-efficient fixtures
- 1.5% EV Parking required and future-proofed for additional infrastructure needs
- Provide dedicated golf-cart parking, as feasible, near building entrances to encourage shorter, low-impact trips and reduce reliance on full-size vehicles

Service & Loading Areas

- Loading, delivery, and service zones must be screened from public view and separated from primary pedestrian paths
- These areas should be located to the side or rear of buildings and designed to minimize conflicts with customer parking circulation

Landscape Planning Strategies

Landscaping plays a defining role in shaping the character, comfort, and environmental performance of commercial development at Babcock Ranch. The landscaping approach must reflect the community's commitment to sustainability, native ecology, and high-quality design while creating comfortable, visually appealing environments for daily life, business, and recreation.

Landscaping should unify commercial districts, enhance environmental performance, and support vibrant, comfortable public environments. Through native plant use, shade, sustainable water strategies, and thoughtful integration with buildings and public spaces, commercial sites at Babcock Ranch will continue to demonstrate leadership in ecological design, resiliency, and community identity.

Purpose and Intent

- Reinforce the community's natural character and ecological identity
- Create shaded, walkable environments for pedestrians
- Integrate stormwater management and Low Impact Development strategies
- Screen and soften building edges, parking lots, and service areas
- Enhance the aesthetic quality and placemaking potential of commercial districts
- Connect seamlessly to greenways, open spaces, and multimodal route

Palette and Selection

- Use primarily native and drought-tolerant plants to reinforce regional ecology and reduce irrigation needs.
- Avoid invasive or high-water-use species.
- Native plantings must represent at least ***90%*** of all plant materials unless otherwise noted.
- Shade trees (native canopy trees prioritized)
- Understory trees for pedestrian-scale environments
- Shrubs & hedges for buffering and screening
- Groundcovers reduce turf and improve infiltration

Sustainability

- Bioswales
- Native vegetated swales
- Rain gardens
- Permeable pavements
- Dry detention basins with native planting
- Prioritize reduced irrigation through native species and efficient systems
- No irrigation overspray into hardscapes or buildings
- Use plant species that provide shade, reduce heat island effects, and support habitat value
- Avoid planting large areas of turf, limit turf to functional gathering spaces only

Open Space Planning Strategies

Open space at Babcock Ranch is not merely leftover green—it is an essential organizing framework that defines the community's character. Thoughtfully planned, well-connected, and environmentally resilient open spaces that create inviting, walkable commercial districts that reflect Babcock Ranch's commitment to sustainability, health, and high-quality design.

Open space is a defining element of Babcock Ranch and plays an essential role in shaping the character, comfort, and ecological performance of commercial development. All commercial projects must integrate open space as a functional, connected, and visually cohesive component of the built environment—supporting the community's sustainability goals while enhancing the experience for residents, visitors, and employees.

Purpose and Intent

- Support walkability and foster a pedestrian-oriented environment
- Provide shade, comfort, and visual relief within developed areas
- Reinforce connections to the community-wide greenway and trail networks
- Integrate nature into daily commercial activity through native landscaping
- Manage stormwater through environmentally sensitive design
- Enhance the identity and placemaking of commercial corridors

Expectations

- Provide open space proportional to the site's scale and function
- Integrate open space into early concept plans
- Demonstrate connectivity to community-wide networks
- Use native landscaping and shade strategies
- Incorporate stormwater and Low Impact Development (LID) principles wherever feasible
- Ensure open space is durable, maintainable, and aligned with the community aesthetic

Relationships

- Organize buildings and circulation around meaningful public space
- Align open spaces with pedestrian desire lines and key views
- Position plazas and greens where they activate storefronts and encourage social activity
- Use open space to buffer parking, service areas, or transitions between uses

Open Space Planning Strategies (cont.)

Types

Plazas & Courtyards

- Provide social gathering areas and outdoor space for dining, seating, events, or retail spill-out.
- Should be directly connected to building entrances, sidewalks, and pedestrian paths.

Pocket Parks & Greens

- Small green areas that offer passive recreation, shade, and landscaped respite within or adjacent to parking areas.
- Must incorporate native plantings and pedestrian amenities.

Greenways & Multi-Use Path Connections

- Maintain continuous, safe, and attractive connections to Babcock Ranch's extensive trail network.
- Should be integrated early in site planning to ensure cohesive circulation and visibility.

Stormwater Open Space

- Stormwater ponds, bioswales, and rain gardens should be designed as amenities, not utilitarian features.
- Incorporate native vegetation, gentle slopes, and accessible edges where appropriate.

Design Principles

Native Landscaping

- Open spaces must prioritize native and drought-tolerant plant species to reinforce ecological fitness and reduce long-term maintenance
- Shade trees are required in high-use public areas to enhance comfort and walkability

Pedestrian Comfort & Amenities

- Benches, waste receptacles, bike racks, and lighting should be incorporated into open spaces to support daily use
- Materials must complement the architectural character and sustainability goals of the community

Connectivity

- Open space must link seamlessly to adjacent parcels, Spine Roads, sidewalks, and trail systems
- Projects should avoid isolated pockets of green and instead create a continuous open space network

Visibility & Access

- Open spaces should maintain good visibility from public streets, building entrances, and internal circulation routes
- Landscaping should frame, not block, views

Environmental Integration

- Open spaces should integrate habitat-friendly practices where appropriate, such as pollinator gardens, tree canopy corridors, and wildlife-sensitive lighting

Service and Utility Locations

Service and utility areas, when thoughtfully designed, support the functional needs of commercial development without compromising the character of Babcock Ranch. By prioritizing screening, sustainability, and seamless integration, these components contribute to a clean, cohesive, and community-focused commercial environment.

Well-integrated service and utility areas are essential to maintaining the visual quality, functionality, and sustainability of commercial development at Babcock Ranch. All service components—including mechanical equipment, loading zones, refuse areas, and utility infrastructure—must be carefully sited, screened, and designed to reduce visual impact while ensuring safe, efficient operations.

Purpose and Intent

- Service and utility functions should be visually unobtrusive
- Logically located, and fully integrated into the site layout and building design.
- These areas must not detract from the pedestrian experience, adjacent development, or the overall character of the community.

Expectations

- Clear, logical placement of service areas
- Full architectural and landscape screening of equipment
- Safe, separated access for service vehicles
- Integration of sustainability and Low Impact Development (LID) Strategies
- Consistency with the community's visual and environmental standards

Coordination

- Creates efficient internal circulation
- Proper relationship to buildings and open space
- Compliance with landscape, lighting, and buffer standards/requirements
- Minimization of visual and operational impacts on adjacent properties

Locations & Access

- *Service areas must be located at the side or rear of buildings, never along primary frontages, Spine Roads, or prominent public spaces.*
- *Access points should be designed to minimize conflicts with pedestrian circulation and customer parking.*
- *Where feasible, developments should incorporate shared service corridors or consolidated loading areas between adjacent parcels.*
- *Service vehicle routes must be clearly defined, separate from primary pedestrian paths, and sized to accommodate delivery vehicles without compromising landscape or open space areas.*

Services & Utilities Locations (cont.)

Types

Mechanical, Electrical & Communication Equipment

- Ground-mounted mechanical, electrical, and telecommunications equipment must be located in low-visibility areas and fully enclosed or screened
- Equipment should be grouped whenever possible to reduce clutter and improve screening efficiency
- Utility meters, conduits, and control panels must be located in service zones and painted or finished to blend with adjacent materials

Waste, Recycling & Loading Areas

- *All refuse, recycling, grease, and loading facilities must be placed away from primary pedestrian areas and screened on all sides*
- *Enclosures must be sized to accommodate required containers and operational needs, including swing clearance for gates and collection vehicle access*
- *Drainage from waste and service areas must comply with environmental regulations and should not discharge directly into landscape areas or open space systems*

Design Principles

Screening & Enclosures

All service and utility components must be fully screened from public view using materials and design strategies consistent with the project's architecture and Babcock Ranch's design character.

- *Architectural enclosures or walls constructed of materials matching or complementing the primary building*
- *Opaque gates or doors for refuse and loading areas*
- *Landscape screening using native shrubs and trees to supplement built screening and soften views*
- *Roof-mounted equipment must be screened using parapets or integrated architectural extensions and should not be visible from adjacent streets or buildings*

Environmental Consideration

- Use energy-efficient equipment and climate-appropriate placement to reduce heat gain
- Integrate Low Impact Development Strategies—such as vegetated swales, native plant buffers, or permeable surfaces—near service routes where appropriate
- Design enclosures and screening with durable, environmentally appropriate materials that minimize long-term maintenance

Founders Square Case Study

Founders Square serves as the central commercial, civic, and social hub for Babcock Ranch. As the first major mixed-use district constructed within Increment 1, it exemplifies the community's vision for a walkable, sustainable, and community-focused commercial environment. The design and development of Founders Square provide an instructive model for future commercial projects throughout Babcock Ranch.

Key characteristics:

- Centrally located along early Neighborhood and Town Center circulation routes
- Directly connected to residential areas, greenways, and the waterfront trail system
- Designed as a daily gathering place and event venue for residents and visitors

Founders Square presents a clear example of how commercial development can shape community identity in its earliest phases.

Site Planning

- Walkability First
- Buildings frame a walkable plaza and lawn, creating a pedestrian-friendly commercial district.
- Direct connections to sidewalks, trails, and golf cart paths strengthen accessibility.
- The lakefront boardwalk and shaded lawn tie commercial uses to the natural landscape.
- Native landscaping reinforces ecological resilience and provides comfort in the Florida climate.

Building Placement & Design

- Central event lawn framed by storefronts and trellises
- Lakefront boardwalk with seating, views, and access to nature
- Shaded pedestrian promenade connecting shops and dining
- Cafés, shops, and restaurants open directly onto the plaza or boardwalk.
- Transparent storefronts encourage interaction between indoor and outdoor spaces.

Access

- Strong pedestrian and bike connectivity to surrounding neighborhoods
- Integrated golf cart routes
- Strategically located parking areas at the edges to preserve walkability
- Defined service access that minimizes conflicts with public spaces

Architectural Design

- One- and two-story buildings maintain comfortable proportions for pedestrians.
- Façades incorporate porches, shading devices, and generous glazing.
- Use of fiber cement, metal roofing, wood accents, and light natural color palettes.
- Roof forms with deep overhangs provide sun protection and reduce heat gain.

Founders Square Case Study: Slaters

Slaters-Front



Dormer window complementary to the main structure

Balcony adds variety, depth, and texture, breaking down overall massing of the building

Arcade with casual seating and store display

Inviting Pedestrian Experience

Slaters- Side



Solar panels incorporated into the gabled roof

Awnings on sun exposed facades

Compact branding not overpowering the architecture

Variation in materiality defines floor heights

Stone facade subdivides the building into well scaled masses

Founders Square Case Study: The Lakehouse

Lake House-Front



Articulated cupula enriches the roof design

Gabled roof consistent with overall roof character

Integrated shade structure with flexible dining space

Lake House-Rear



Unique wooden building facade contrasts the prevalent material vocabulary

Roof articulation identifies main entry

Branding/Signage providing a distinct design element

Contrasting textures brings a richness to exterior wall

Founders Square Case Study: Woodlea Hall

Woodlea Hall-Front



- Shed roof adding unique identity
- Building elevation maintains sense of balance with regard to openings and massing of elements
- Branding and signage designed within metal structure
- Facade design with vertical and horizontal elements to break the mass
- Architectural vision overlooking public gathering spaces

Woodlea Hall-Rear



- Contemporary architectural details are encouraged
- Minimum service visibility on exteriors
- Dual-sided architecture providing positive attraction to front and rear views
- Lush planting positively addressing the parking lot
- Inviting and welcoming entryway flanked by metal structure

Founders Square Case Study: Lee Health

Lee Health-Front



Standing seam metal gabled roof

Dormer windows add intrigue to the facade design and enhanced interior illumination

Architectural details consistent with the overall character of the community

Arcade with outdoor seating acts as an extension of the public realm

Lee Health- Rear



Integrated signage with metal architecture details

Architecture paying attention to rear view from the parking lot

Inspirational Examples

Multi-Family / Rental Properties (Existing)

Flatwoods Single Family Rental



The Canopy Apartments



Inspirational Examples

Civic Buildings (Existing)

Charlotte County Fire/EMS



Charlotte County Sheriffs Department



Inspirational Examples

Civic Buildings (Conceptual)

Library



City Hall



Inspirational Examples

Educational (Existing)

Babcock Ranch Neighborhood School





Inspirational Examples

Self-Storage Facilities (Existing)

The Lockup at Babcock Ranch



Inspirational Examples

Light Industrial (Under Construction)

Curry Commerce Center







Inspirational Examples

Office Space / Mixed Use

B Street at Babcock Ranch (Under Construction)



Inspirational Examples

Places of Worship (Conceptual)







Inspirational Examples

Medical Facilities (Existing)

Tampa General Emergency Care (Shoppes at Yellow Pines)





Inspirational Examples

Food and Beverage (Existing)

Oar and Iron (Shoppes at Yellow Pines)





Inspirational Examples

Shoppes at Yellow Pines













Inspirational Examples

Crescent B Commons (Existing)













Inspirational Examples

Hospitality and Resorts (Existing)

Luminary Hotel (Fort Myers, FL)

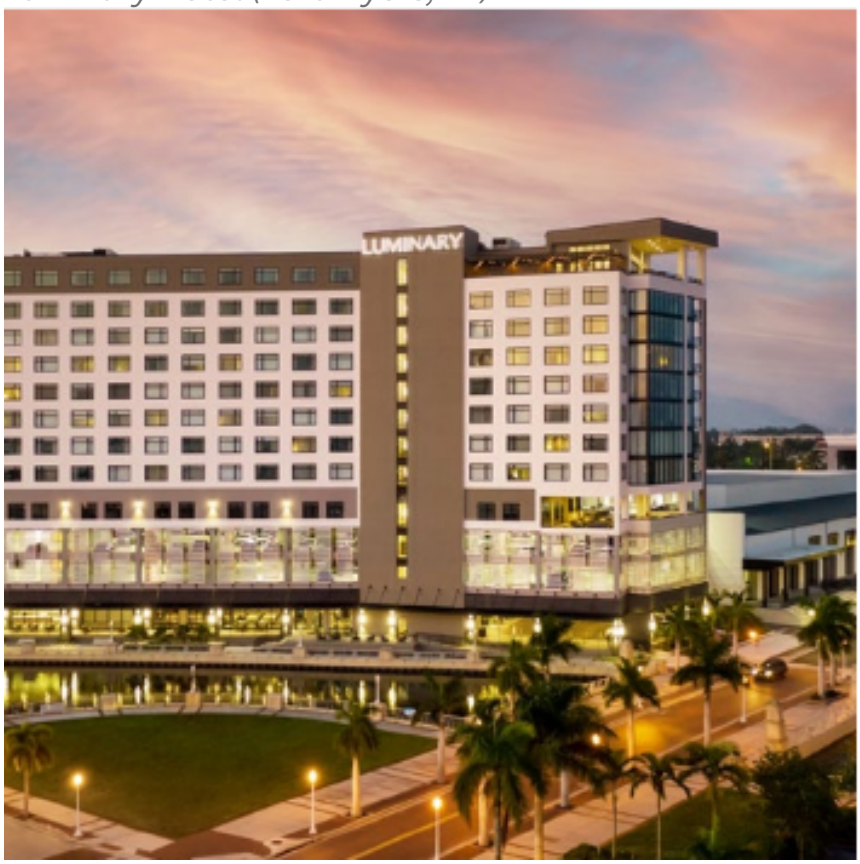

BABCOCK RANCH
FLORIDA

HARDSCAPE GUIDELINES

Introduction

Welcome to Babcock Ranch, The Standard for Thoughtful, Environmentally Responsible and Sustainable Development! A Development Designed to Enrich the Human Experience, Where People and Nature are Inseparable.

Hardscape design is a foundational element of the Babcock Ranch community, shaping how residents and visitors move through, gather within, and experience the public realm. As America's first solar-powered town, Babcock Ranch is built upon principles of sustainability, innovation, resilience, and human-centered design. The hardscape environment must reflect and reinforce these values through thoughtful planning, durable materials, and cohesive design.

The hardscape network—including streets, sidewalks, trails, plazas, parks, gateways, seating areas, walls, lighting, signage, and site furnishings—forms the structural framework that supports daily life at Babcock Ranch. These elements organize circulation, define public spaces, support accessibility, enhance safety, and contribute to the community's identity. When designed holistically, hardscape elements work in concert with landscape systems, architecture, and natural environments to create a comfortable, walkable, and visually unified setting.

These Hardscape Guidelines establish a consistent approach for the planning, design, and implementation of hardscape elements throughout Babcock Ranch. The guidelines are intended to ensure high-quality design outcomes, long-term performance, and compatibility across neighborhoods, parks, trails, civic spaces, and commercial districts. They emphasize durability in Florida's climate, integration with native landscapes, climate-responsive design strategies, dark-sky lighting principles, and universal accessibility.

These guidelines are not meant to limit creativity, but rather to provide a clear framework that supports design excellence while maintaining cohesion across the community. All hardscape improvements should be coordinated with applicable zoning regulations, the Design Specifications Manual (DSM), Pattern Books, and county requirements. Where conflicts occur, the more restrictive standard shall apply.

Legal Notice & Special Exception

Guidelines set forth in this document, and the interpretations of same may be enforced by the Founders Review Committee, Florida Green Build Coalition Certified Professionals and/or their designated representatives.

The BRCISD bears no liability for, and expressly disclaims any responsibility arising from, the interpretation, application, or reliance upon these design guidelines. Users are solely responsible for independently determining and verifying that their designs comply with all applicable Federal, State, and local laws, regulations and codes, including but not limited to zoning ordinances, building codes, and accessibility requirements.

Special Exception: The Founders Review Committee, reserves the authority to grant all waivers or special exceptions. The intent of these guidelines is to provide direction while encouraging ongoing coordination with the FRC and FGBC professionals throughout the architectural design process to ensure the highest-quality outcomes for Babcock Ranch.

Glossary

Americans with Disabilities Act (ADA)
American Society for Testing and Material (ASTM)
Babcock Overlay Zoning District (BOZD)
Babcock Ranch Community Independent Special District (BRCISD)
Certified Playground Safety Inspector (CPSI)
Consumer Product Safety Commission (CPSC)
Crime Prevention Through Environmental Design (CPTED)
Design Specifications Manual (DSM)
Development of Regional Impacts (DRI)
Florida Green Build Coalition (FGBC)
Forest Stewardship Council (FSC)
Founders Review Committee (FRC)
Independent Special District (ISD)
Master Planned Development (MPD)

References

The documents listed below, along with any additional applicable Federal, State, Local, or ISD publications not specifically identified here, take legal precedence over all design guideline content and should be reviewed to inform planning efforts.

- Americans with Disabilities Act
- American Society for Testing and Material
- BRCISD Design Specification Manual (DSM)
- Babcock Ranch Community Master Development of Regional Impact (DRI)_Charlotte County
- Babcock Overlay Zoning District (BOZD) documents_Charlotte County
- Babcock Ranch Master Plan Development (MPD)_Lee County
- Certified Playground Safety Inspector Certification
- Charlotte County Zoning and Building Code
- Consumer Product Safety Commission
- Crime Prevention Through Environmental Design
- Master Development Order (MDO)_Charlotte County
- Lee County Zoning and Building Code
- Florida Green Build Coalition (FGBC) Commercial Certification
- Florida Department of Environmental Protection Regulation
- Forest Stewardship Council
- Sierra Club Settlement Agreement
- South Florida Water Management District Regulations

Vision & Sustainability Guiding Principles

Every hardscape element at Babcock Ranch shall be designed to support a resilient and environmentally responsible community capable of performing under the severe weather conditions typical of Southwest Florida. Planning and design must account for hurricane-force winds, extreme rainfall events, and long-term exposure to Florida's climate.

Hardscape infrastructure—including streets, plazas, sidewalks, walls, signage, and site furnishings—shall incorporate durable materials, secure structural systems, and effective stormwater management strategies that maintain functionality during and after storm events that embody Babcock Ranch's commitment to Innovation, Technology, and Sustainability. Through thoughtful detailing, climate-conscious material selection, and purposeful integration with landscape systems, the hardscape realm becomes a durable, adaptable, and inviting foundation that supports community life today while preparing for the challenges of tomorrow.

Stormwater performance is a critical component of resilient design. Hardscape surfaces must be graded and detailed to promote positive drainage, protect adjacent landscape systems, and convey runoff safely to the community's stormwater infrastructure. Where appropriate, designers are encouraged to integrate permeable surfaces, landscape infiltration areas, and other low-impact design strategies that reduce runoff, support groundwater recharge, and enhance ecological performance.

Through thoughtful integration of structural resilience, stormwater management, and durable materials, hardscape systems at Babcock Ranch will contribute to a safe, sustainable, and long-lasting public realm that supports the community's commitment to innovation, environmental stewardship, and long-term resilience.

Climate-Responsive Design
Hardscape systems must be designed to thrive in the Florida climate—prioritizing heat-mitigating materials, reflective surfaces, ample shade, hurricane resistance and strategies that minimize thermal gain. Layouts should support airflow, comfort, and year-round usability while reducing environmental impact.

Water Stewardship & Integrated Stormwater

- Incorporate permeable paving, bioswale edges, and thoughtful grading.
- Direct rainwater to planted areas and natural filtration zones whenever possible.
- Avoid excess runoff, erosion, or heat-hardened surfaces that disrupt ecological performance.

Vision & Sustainability Guiding Principles (cont.)

Low Impact Development (LID)

- *High durability and long life cycles*
- *Locally or regionally sourced aggregates*
- *Recycled content where appropriate*
- *Systems that minimize waste during installation or future replacement*

Habitat and Landscape Integration

- *Prioritize edges that soften hardscape transitions with shade trees and plantings*
- *Avoid unnecessary impervious expansion*
- *Maintain wildlife-safe lighting and pedestrian circulation patterns*

Mobility, Walkability & Human Comfort

- *Provide accessible, comfortable pedestrian routes that encourage walking and cycling*
- *Create multimodal pathways that reduce vehicle dependency*
- *Use materials and patterns that guide intuitive wayfinding*

Operational Resilience & Longevity

- Prioritize modular systems that are easy to maintain and repair
- Ensure consistent material performance across neighborhoods
- Integrate lighting, utilities, and technology in ways that support future upgrades

Innovation & Continuous Improvement

- Pilot emerging materials that reduce carbon footprint
- Integrate smart infrastructure and environmental sensors where appropriate
- Embrace adaptive design that responds to changing climate and community needs

Severe weather and Hurricane Resiliency is of the utmost priority throughout Babcock Ranch. All hardscape elements must be secured or easily stowed to prevent flying debris and damage to property during all severe wind and hurricane like conditions and/or events.

Hardscape Planning

Hardscape design at Babcock Ranch plays an essential role in shaping a connected, walkable, and resilient community. As America's first solar-powered town, Babcock Ranch integrates environmental stewardship, innovative infrastructure, and a strong public realm framework that places people and nature at the center of community life. Hardscape planning must reflect these values by creating functional, beautiful, and durable spaces that enrich everyday experiences while supporting long-term sustainability.

The hardscape network—including streets, sidewalks, trails, plazas, parks, gateways, walls, furnishings, lighting, and signage—forms the backbone of the built environment. Effective planning requires a holistic approach that considers mobility, accessibility, safety, microclimate, aesthetics, ecological performance and hurricane resistance. Each hardscape element must reinforce walkability, strengthen community identity, and integrate seamlessly with landscape systems and architectural forms.

Hardscape planning begins with an understanding of the broader community framework: greenway corridors, neighborhood centers, mixed-use districts, civic destinations, and natural open spaces. Designers must anticipate patterns of movement and gathering, prioritize pedestrian and cycling environments, and coordinate transitions between built and natural conditions. Material selection, layout, grading, and detailing must balance durability with visual consistency, ensuring long-lasting performance under Florida's climate conditions.

Babcock Ranch's planning philosophy emphasizes innovation, resilience, and human-centered design. Hardscape solutions should incorporate low-impact materials, permeable surfaces where appropriate, climate-responsive strategies, dark-sky compliant lighting, and universally accessible circulation.

Monument Signage Overview

Entrance monuments at Babcock Ranch serve as signature gateway elements that define the identity of the community, its villages, neighborhoods, mixed-use districts, and major destinations. These features establish a unified character across the community while allowing for local differentiation that supports placemaking. All entrance monuments must comply with the Babcock Ranch DSM and applicable county zoning regulations governing signage, lighting, and placement. FRC approval *must* be obtained prior to any permitting or construction activities.

Types:

Primary Community Gateways

Located at major vehicular entries to the overall Babcock Ranch community.

- Largest scale, iconic identity elements
- Premium materials (stone, concrete, metal)
- Integrated lighting and strong landscape presence

Village & Neighborhood Entrances

Located at residential villages, sub-neighborhoods, and internal districts

- Moderate scale, pedestrian-oriented detailing
- Consistent palette with primary monuments
- Strong planting integration

District & Park Entrances

Used for commercial centers, mixed-use districts, and signature parks

- Scaled to match adjacent land use activity
- May incorporate specialty branding
- Coordinated with streetscape elements

Overall *Scale, Height & Proportion*

- Monument height and square footage thresholds must comply with approved county zoning requirements
- Proportions must be visually balanced and appropriately scaled to roadway speed and sight distance.
- Long, low forms may be used where horizontal visibility is preferred.
- Vertical elements should be used sparingly and always integrated with a massing base.

Construction Requirements

- All structures must be fully engineered and built to withstand Florida climate conditions (UV exposure, storms, humidity).
- No faux materials that fade, delaminate, or chip.
- Exposed fasteners must be concealed; hardware should be corrosion resistant.
- ***Fountain features are strictly prohibited at community entrances throughout Babcock Ranch***

Community Gateway Signage (existing)





Community Gateway Signage (existing)





Community Gateway Signage (existing)





Neighborhood Entrance Signage

Design Intent

- Reinforce the Babcock Ranch brand through cohesive architecture, materials, lighting, and landscape integration.
- Create a welcoming, memorable first impression at all community and neighborhood entries.
- Ensure monument forms complement the surrounding hardscape, architecture, and natural landscape.
- Balance high durability, clean aesthetics, and human-scale visibility appropriate to roadway context.
- ***Fountains are strictly prohibited at neighborhood entrances throughout Babcock Ranch***

Color Palette

Earth tones and low saturated colors are the only approved colors. Color selection must be included in the ISD submittal in order to receive FRC approval prior to county permitting and construction



Aesthetic Materials

- Plastic or vinyl materials are ***strictly prohibited***
- Architectural concrete or precast
- Natural stone, cast stone, or textured stone veneer
- High-quality metal panels (aluminum, Corten, powder-coated steel)
- FSC-certified wood or composite accents (in limited applications)

Lighting

- Illuminated lettering is preferred
- LED lighting is required
- Dark sky compliance is required
- Must comply with county photometrics requirements

Landscape Integration

- Entrance monuments must be supported with layered planting beds featuring native or Florida-friendly species.
- Use shrubs, ornamental grasses, and groundcovers to soften bases and conceal structural transitions.
- Accent trees may be used to anchor compositions and provide scale.
- Irrigation zones must ensure long-term plant viability without overspray on monument surfaces.

Typography, Graphics & Branding

- Fonts, letterforms, and logos must follow the approved Babcock Ranch identity standards.
- Channel letters, routed metal panels, or dimensional lettering preferred.
- No flat vinyl appliqués unless approved for temporary installations.
- Graphic elements must be proportionate to the monument size and visible at intended approach speeds.

Neighborhood Entrances







Neighborhood Entrances (cont.)





Commercial Signage

Commercial signage at Babcock Ranch plays a critical role in establishing identity, supporting business visibility, and contributing to the overall character and cohesiveness of the community's built environment. Signage must be attractive, well-proportioned, durable, and designed to complement the architectural style, streetscape, and landscape framework of each commercial district. The goal is to create a unified signage environment that reinforces Babcock Ranch's values of Innovation, Sustainability, and Design Excellence while supporting a thriving business ecosystem.

Design Intent

- Establish a consistent, high-quality visual identity across all commercial areas
- Enhance wayfinding, storefront visibility, and pedestrian access
- Integrate with building architecture and streetscape elements
- Use materials and detailing that complement the natural and contemporary aesthetic of Babcock Ranch
- Maintain human-scale proportions appropriate for walkable mixed-use environments
- Avoid visual clutter, excessive brightness, or overly decorative forms
- Support a clean and welcoming public realm both day and night

Signage Types

Monument Signs

- Low-profile, horizontally oriented designs
- Materials may include stone, architectural concrete, metal panels, or composite elements
- Integrated landscape base required
- Dark-sky compliant lighting required

Wall Signs

- Mounted directly to the primary building façade
- Scale must be proportional to façade massing and storefront width
- Halo-lit channel letters or externally illuminated signage required
- Raceways must be concealed

Blade / Projecting Signs

- Perpendicular to building face for pedestrian visibility
- Simple, elegant forms with metal or composite construction
- Externally illuminated or low-output internal lighting permitted

Window & Door Graphics

- Subtle vinyl graphics for hours, logos, and operational messaging
- Full-window wraps or bright opaque patterns discouraged

Directory & Wayfinding Signs

- Provided for multi-tenant buildings, plazas, or commercial villages

Commercial Signage (cont.)

Placement & Scale Requirements

- Signs must be aligned with architectural features: transoms, mullions, parapets, and storefront framing
- Proportions must enhance the building rather than overpower it
- Placement should support visibility for both pedestrians and slow-moving vehicles
- Monument signs must be integrated with landscaped buffers and placed outside required sight triangles

Materials & Finishes

Approved Materials

- Powder-coated aluminum or steel
- Routed or laser-cut metal-letter signage
- High-density composite panels (for blade or monument signs)
- Architectural concrete or stone for monument bases

Color Palette

- Muted, natural, and neutral tones preferred
- Vibrant brand colors allowed on a limited basis for logos, not backgrounds
- All lighting must preserve a warm 3000K color temperature (no blue-white LEDs)

Hardware

- Stainless-steel tamper-resistant hardware.
- All fasteners either concealed or color-matched.





Wayfinding Signage

Wayfinding signage at Babcock Ranch provides clear, intuitive navigation across the community's interconnected network of streets, trails, parks, civic spaces, and mixed-use destinations. As a master-planned, walkable, and sustainability-focused community, wayfinding signage must balance clarity and legibility with a refined, landscape-integrated aesthetic that reinforces Babcock Ranch's identity. Wayfinding signage is intended to guide rather than advertise, helping residents and visitors orient themselves, make confident navigation decisions, and experience the community comfortably and safely.

Design Intent

- Provide clear and consistent directional guidance at key decision points
- Reinforce Babcock Ranch's cohesive visual identity across all districts
- Support pedestrians, cyclists, and motorists at appropriate scales
- Integrate seamlessly with hardscape, landscape, lighting, and architecture
- Reduce visual clutter through a hierarchical, coordinated signage system
- Enhance safety, accessibility, and overall user experience

Signage Types

Directional Signs

- Freestanding or post-mounted signs with arrows and destination text
- Limited number of destinations per face to maintain legibility
- May be single- or double-sided

Map & Orientation Signs

- Typically located at trailheads, plazas, parking areas, and civic nodes
- Display "You Are Here" orientation maps
- May include rules, distances, and key landmarks

Fingerpost Signs

- Used primarily in pedestrian or trail environments
- Directional blades stacked vertically
- Must maintain consistent blade size, typography, and spacing

Placement & Scale Requirements

- Locate signs at natural decision points (intersections, trail splits, entries)
- Align signs with pedestrian sightlines and approach paths
- Avoid blocking sidewalks, trails, or ADA routes
- Coordinate placement with planting, lighting, and furnishings

Regulatory Coordination

Wayfinding signage must comply with:

- Babcock Overlay Zoning District Pattern Book (as applicable)
- Babcock Ranch Design Specifications Manual (DSM)
- Charlotte County zoning and signage requirements (see pattern book #17)
- Lee County zoning requirements

Wayfinding Signage Examples



TRBL.1
Location 307



TRBL.1
Location 308



TRBL.1
Location 317



TRBL.1
Location 329



TRBL.1
Location 343



PARK.1.1
Location 502
Side A



PARK.1.1
Location 502
Side B



PARK.1.1
Location 503
Side A



PARK.1.1
Location 503
Side B



PARK.1.1
Location 504
Side A



PARK.1.1
Location 504
Side B



PARK.1.1
Location 508
Side A

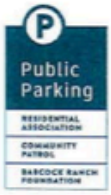

PARK.1.1
Location 508
Side B



PARK.1.2
Location 506
Side A



PARK.1.2
Location 506
Side B



VDIR.2
Location 306



VDIR.2
Location 310



VDIR.2
Location 314



VDIR.2
Location 324



VDIR.2
Location 326



VDIR.2
Location 328



VDIR.1
Location 304



VDIR.1
Location 322



VDIR.2U
Location 316



VDIR.1U
Location 312

Street Signage Requirements

Street signage at Babcock Ranch supports community identity, safety, and navigability. The design, placement, and construction of all street signage must reinforce the town's cohesive visual character while meeting county, state, and MUTCD requirements. These guidelines ensure consistent quality across residential neighborhoods, mixed-use districts, parks, and commercial corridors.

Objectives

- Establish a uniform palette of posts, frames, colors, and mounting heights.
- Maintain clarity and legibility for drivers, cyclists, and pedestrians.
- Ensure signage integrates visually with the hardscape, landscape, and streetscape.
- Use long-lasting materials suitable for Florida's climate, including UV exposure and corrosion.

Specifications

General Requirements

- All signs to be made of solid sheet aluminum
- All poles and frames to be black.
- Must meet Florida Product Approval Code standards
- All street signs to be green with white text and a reflective vinyl plastic covering
- All traffic signs that are not double sided must be backed with a black panel

Poles

- Round aluminum posts, 3" or 4" diameter depending on sign type.
- Powder-coated black or dark bronze.
- Posts include: Decorative fluted base , smooth round pole and round acorn finial topper. Access points for concealed fasteners should be considered
- *FDOT Code minimum posts are **only authorized** to be used for temporary purposes and must be replaced with appropriate Babcock Ranch approved poles (see street sign exhibit)*

Frames

- All traffic signs to be installed with black simple cast aluminum frames
- All street signs to be installed with a black classic blade trim with chamfered corners.
- Frames match the post color (powder-coated).
- Fasteners concealed to maintain a clean appearance.

Street Signage Exhibit

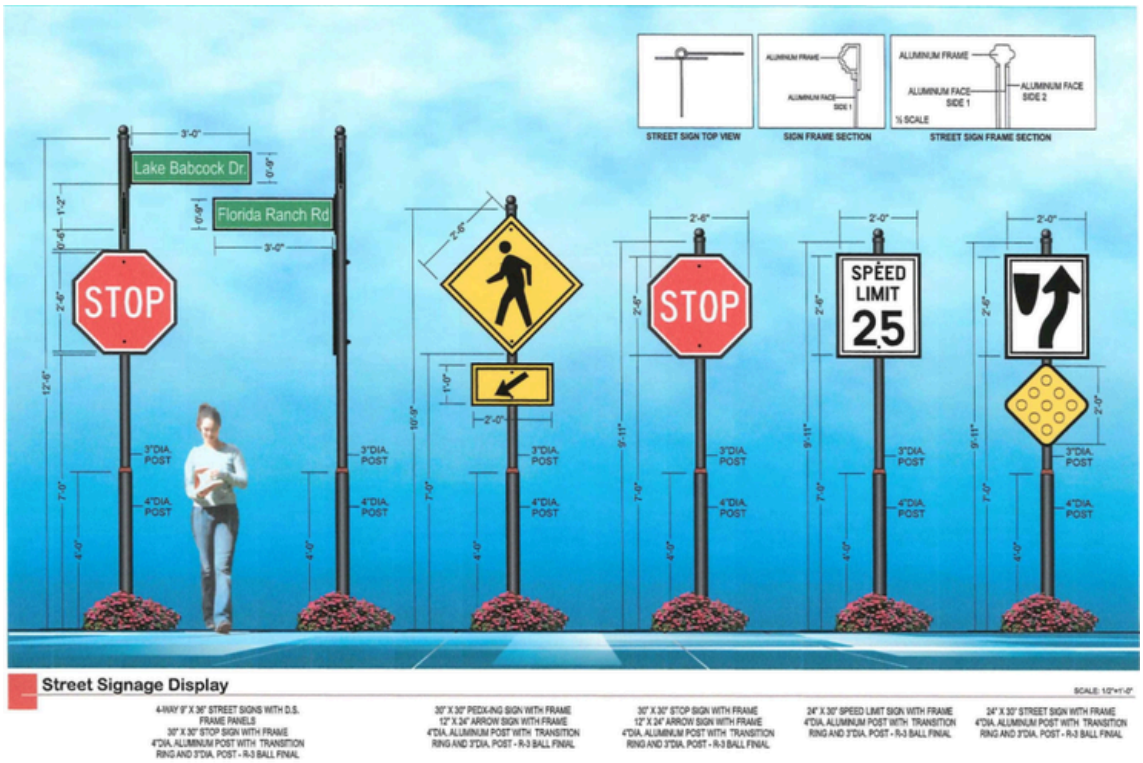













Park Entrance Signage

Parks and trail entrance signage at Babcock Ranch serves as a key visual identifier of the community's natural, connected, and outdoor-oriented character. Signage must reinforce the community's brand identity, celebrate the landscape, and guide visitors through a cohesive, welcoming, and environmentally conscious park system.

The examples below illustrate the recommended aesthetic and structural qualities for Babcock Ranch's park and trail entry signage.





Conceptual Drawing



Trail Signage

Trail signage at Babcock Ranch provides a unified system of wayfinding, identity, safety communication, and orientation throughout the community's extensive trail and recreation network. Reflecting the community's nature-integrated character and design consistency, the signage program is built around a family of durable, non-illuminated aluminum structures engineered for Florida's climate and wind-load conditions. The trail signage system must guide users clearly while reinforcing the visual identity of Babcock Ranch across parks, greenways, and open spaces.

Signage Intent

- Provide clear and legible trail identification at entry points and intersections
- Communicate directional guidance and distances to major community destinations
- Present park identity and regulatory information consistently across all trailheads
- Offer map-based orientation for safe navigation within the broader open-space system
- Reinforce the Babcock Ranch brand through coordinated colors, typefaces, and logos
- Ensure long-term performance through engineered aluminum construction, smooth finishes, and compliance with 2023 Florida Building Code wind loads

Across all applications, trail signage must be placed to ensure visibility without obstructing natural vistas, pedestrian flow, or ADA access. Signs should align with adjacent trails, planting zones, and open-space features to maintain a clean and intentional presence within the landscape.

Through this coordinated signage system, Babcock Ranch offers trail users a safe, intuitive, and environmentally sensitive wayfinding experience that strengthens community identity and enhances engagement with the natural environment.

Reference: BOZD Pattern Book #17 for Charlotte County and Lee County Zoning Codes. *The pattern book must undergo modifications for any proposed signage not previously approved.*

Trail Signage

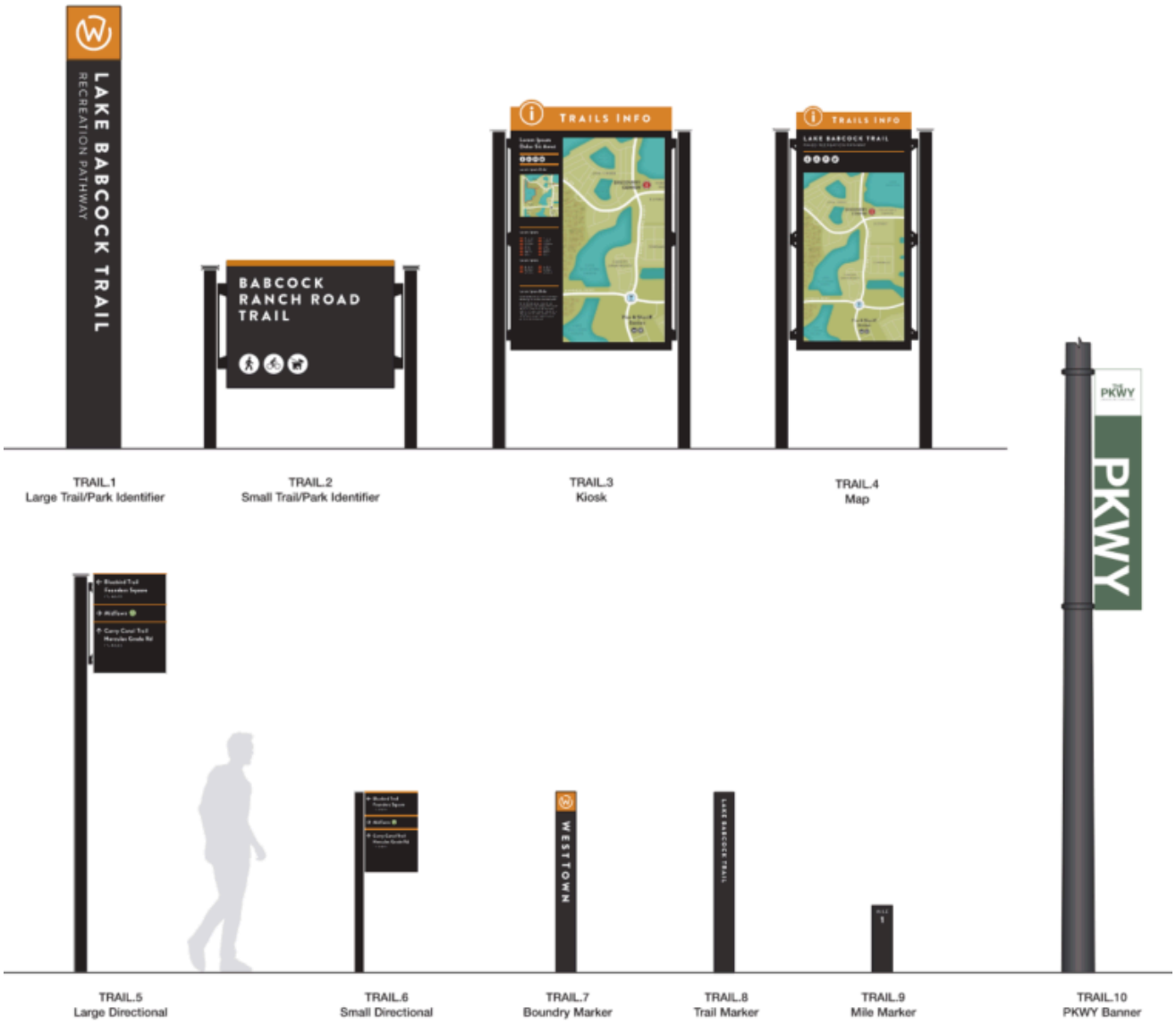

Street Light Requirements

Street lighting within Babcock Ranch must reflect both the functional needs of safe nighttime visibility and the community's desired character. Fixtures must be durable, storm-resilient, energy-efficient, and visually compatible with the traditional village aesthetic that defines Babcock Ranch public spaces. The following standards establish the required performance, design character, materials, and spacing criteria for all street lighting within entrance drives and similar roadway conditions.

Structural Compliance

- Poles must withstand Category V hurricane conditions.
- Poles must be non-conductive and non-corrosive.
- Each pole must support a minimum 100 lbs at its top.
- Pole materials must comply with these ASTM standards: D635, A153, A356, A319, A307.

Fixture Character

- Fixtures should exhibit simple, traditional qualities.
- Highly decorative, contemporary, or ornamental poles or luminaires are not permitted.
- Acceptable fixtures include wide-brim hooded luminaires, teardrop pendants, or similar traditional forms.

Color & Finish

- Poles and luminaires must be: Black, Dark Gray or Dark Bronze
- Matte or smooth finishes are required.
- Glossy finishes are not permitted.

Pole Requirements

- Mounting Height: 15'–6"
- Pole Style: FPL Washington-style pole, Fluted base, Straight or tapered smooth pole
- Spacing: 250' on center (average)

Light Levels

- Average footcandle: 0.25 fc
- Maximum brightness: No area may exceed 1.25 fc
- Uniformity ratio: 5:1

Luminaire Requirements

- Fixture Type: Arm-mounted or side-mounted fixture
- Style: Wide-brim hooded light fixture
- Curved arms or additional bracket arms are acceptable
- Double-arm fixtures permitted when located within medians

Street Lights (cont.)

Approved Fixture Expressions (Examples)

- Double arm hooded fixture with wide brim
- FPL teardrop pendant on decorative arm
- Beacon Urban Micro Strike

Leasing

- All leased lighting must comply with standards within this section

All lighting throughout Babcock Ranch must be dark sky compliant!

StreetLeaf Classic (Spine Roads)



Streetleaf (Parks)



FPL (Leased) Spine Roads



Accent Lighting

Accent lighting enhances the nighttime identity and public realm experience of Babcock Ranch by highlighting key architectural features, landscape elements, and community gathering spaces in a subtle, intentional manner. Rather than creating brightness or visual clutter, accent lighting provides a warm, welcoming layer of illumination that complements functional street and pedestrian lighting while supporting the community's commitment to sustainability and dark-sky principles.

Accent lighting must be carefully planned and integrated into the design of plazas, parks, trails, structures, and signage so fixtures remain discreet and lighting effects feel natural and harmonious. A restrained approach ensures that only select elements receive emphasis, reinforcing wayfinding, placemaking, and nighttime comfort without impacting surrounding natural habitats.

Durable, energy-efficient, warm-white (3000K) fixtures are required, with all installations designed to minimize glare, uplight, and spill. Coordination with hardscape, landscape, and utilities early in the design process is essential to achieving long-lasting, aesthetically cohesive, and environmentally responsible accent lighting throughout Babcock Ranch.

All lighting throughout Babcock Ranch must be dark sky compliant!



Streetleaf PATH (Example)





Perimeter Walls & Fences

Perimeter walls and fences at Babcock Ranch shall be used only where necessary to delineate between differing land uses or to address safety and security needs. Their primary purpose is to clearly define boundaries between public, semi-public, and private areas while maintaining the open, connected character of the community.

Careful attention must be given to scale, materials, and landscape integration so that transitions between uses are clearly defined while remaining consistent with the natural and community character of Babcock Ranch.

Design Intent

- Establish a consistent, high-quality appearance across the community
- Support safety, privacy, and wayfinding without creating visual barriers
- Integrate with the surrounding landscape, grading, and architecture
- Enhance the pedestrian experience through scale, transparency, and material selection
- Reflect the values of Innovation, Technology, and Sustainability that define Babcock Ranch
- Construction methods and materials must reflect ability to withstand category 5 hurricanes

Placement Principles

- Walls and fences shall align with roadway geometry, sidewalks, and landscape corridors.
- Long, uninterrupted runs are discouraged; introduce offsets, piers, or landscape breaks.
- Elements must not impede sightlines at intersections or driveways.
- Coordinate with utilities, drainage infrastructure, and easements.

Lighting & Signage Integration

- Only low-level, shielded lighting may be integrated into columns or adjacent landscape.
- No uplighting of perimeter walls near natural areas
- Signage integrated into perimeter walls must follow Babcock Ranch identity standards and zoning requirements and only permissible at property corners

Coordination With Hardscape & Landscape

- Align poles with paving and planting geometry
- Maintain safe pedestrian clear zones
- Integrate conduits within hardscape during early planning
- Coordinate lighting with street signage, benches, tree placement, and stormwater features

Preferred Materials

- Architectural concrete (smooth, board-formed, or textured)
- Masonry units with integral color
- Natural or manufactured stone
- Powder-coated aluminum or steel fencing
- Wood or composite elements in limited, protected applications

Prohibited Materials

- Exposed standard CMU without architectural finish
- Bright galvanized metals
- Barbed wire or security-style fencing

Furnishings, Structures & Equipment

Furnishings, structures, and site equipment play a critical role in shaping the comfort, usability, and identity of Babcock Ranch's public realm. These elements must support daily activities, encourage social interaction, and reinforce a cohesive community character. All site amenities shall be designed as integrated components of the hardscape system, not as isolated objects.

Layout and Placement

- *Furnishings shall be placed to support natural patterns of movement and gathering*
- *Maintain clear pedestrian travel paths and ADA-compliant clearances*
- *Coordinate placement with shade, views, and activity zones*
- *Avoid clutter, group elements intentionally where appropriate*

Sustainability Requirements

- Recycled metals and composites, wherever possible
- Avoid virgin PVC, untreated lumber, or low-grade plastics
- Furnishings must last 15+ years with minimal maintenance
- Replaceable components preferred (slats, caps, hardware)
- Avoid dark materials in exposed sun unless shaded
- Use thermally broken seating materials (wood/composite preferred)

Placement, Spacing & Spatial Coordination

- Furnishings must not impede ADA routes
- Maintain a minimum 5 ft clear zone on sidewalks
- Avoid clustering unless intentionally grouped for programming
- Align with paving patterns
- Avoid obstructing drainage or utility covers
- Use consistent offsets from seating walls, light poles, and trees
- Do not place furnishings directly within planting beds
- Position seating within shade corridors
- Protect root zones with proper pad placement

Safety, Security & Maintenance

- Rounded edges and corners
- No protruding bolts or sharp hardware
- No tripping hazards in circulation areas
- Maintain views in and out of spaces
- Avoid hidden or enclosed seating pockets
- Lighting must support visibility without glare
- Easy to clean
- Durable graffiti resistant finishes
- Appropriate clearance access for maintenance purposes

Trash and Recycling Receptacles

Effective waste and recycling infrastructure is an essential component of a clean, healthy, and sustainable community. At Babcock Ranch, trash and recycling receptacles must reinforce the community's values of innovation, environmental stewardship, and high-quality public realm design. These guidelines ensure consistency, durability, and visual cohesion across all districts—residential, commercial, civic, parks, and trails.

Wildlife & Environmental Protection

- Use lids that prevent animal disturbance
- Keep bins away from sensitive habitats unless required for trailheads
- Use materials that do not leach, rust, or degrade into surrounding landscapes
- Bear/wildlife proof trash receptacles are *encouraged* to be installed in parks, trails and any area adjacent to conservation/preserve areas

Trash Receptacles

- FSC-certified Wood/composite accent slats
- UV-stable recycled plastic
- Weighted or anchored base for wind stability
- Side loading required for ADA compliance and wildlife deterrence

Recycling Receptacles

- Must be visually distinct yet coordinated with trash units
- Clearly labeled with color-coded or icon-based signage
- Recycling offered anywhere trash is provided
- Recycling units must visually reinforce sustainable behavior
- Side-by-side pairing is required in all public settings
- Side loading required for ADA compliance and wildlife deterrence

Pet Waste



Trash & Recycling



Bear Proof



Hydration Amenities

Hydration amenities—including drinking fountains, bottle fillers, and pet fountains—support public health, comfort, and the sustainability of Babcock Ranch's active, outdoor-oriented community. These features must be durable, universally accessible, and seamlessly integrated into the landscape, trail, and park network to provide convenient hydration opportunities that reinforce both community identity and environmental values.

Placement must be carefully planned to ensure these amenities are highly visible, located in shaded or partially shaded areas, positioned adjacent to hardscape pads, seating, or gathering spaces, and supported by fully ADA-compliant approach and maneuvering clearances.

Sustainability Requirements

- Low-flow fountain heads
- Auto or Timed shutoff
- Bottle fillers promoting reduction of single-use plastics
- Long-life components that reduce replacement frequency

ADA & Universal Accessibility Requirements

- One ADA-compliant fountain (lower height, front approach)
- Clear floor space: 30" × 48" minimum
- Bottle fillers mounted at reachable height (≤ 48" for operable parts)
- Pet fountains placed where they do not obstruct accessible paths

Location Considerations

- Trailheads and greenway nodes
- Community parks and sports fields
- Mixed-use plazas and civic spaces
- Dog parks and pet-friendly corridors
- Near playgrounds and shade structures





Bicycle Racks / Stalls

Bicycle parking plays a crucial role in supporting Babcock Ranch's commitment to walkability, multimodal mobility, health, and sustainability. Bicycle racks and parking stalls must be durable, convenient, visually cohesive, and strategically placed to encourage cycling as a safe everyday mode of transportation. These elements form an integral part of the community's hardscape and mobility infrastructure.

Requirements

- Fixed element that is either surface mounted or embedded
- Will not impede any adjacent walkway or flow of traffic
- Powder coated or galvanized steel or aluminum
- Type and color must be approved by the FRC (black is the only color exception that does not require FRC approval)

Semi-Custom Inverted-U



Standard Bicycle Loop Rack



Playgrounds & Equipment

Playgrounds and recreational equipment are essential components of Babcock Ranch's vibrant, family-oriented public realm. Designed to encourage active lifestyles, social connection, and nature-based exploration, these spaces contribute to the health, wellbeing, and daily enjoyment of residents and visitors of all ages. As an innovative, sustainable, and walkable community, Babcock Ranch places a strong emphasis on creating play environments that are safe, inclusive, engaging, and seamlessly integrated into the surrounding hardscape and landscape systems.

Requirements

- CPSI Certification
- Designed to CPSC and ASTM guidelines
- Defined planted or fence perimeter that prevents free flow to adjacent streets or parking areas
- Waste receptable within visible range of the play area, but not where people congregate
- Furnished with a minimum two benches or picnic tables, for seating, within the play area
- Foster social interaction, improve skill development. inclusive and accessible for all abilities
- Shade areas through utilization of shade trees or shade structures

Neighborhood Playgrounds

- Serve local residents within walking distance
- Contain small to medium-scale equipment
- Include benches, shade, trash/recycling, bike racks, and hydration options
- Provide toddler and youth play zones where space allows

Community or Destination Playgrounds

- Large, multi-age play areas within community parks
- May include climbing structures, towers, water play, and sensory elements
- Integrated shade structures required
- Bear-proof trash and recycling receptacles recommended
- Restrooms, seating courts, and gathering spaces highly encouraged



Playgrounds & Equipment (cont.)







Playgrounds & Equipment (cont.)







Shade Structures

Babcock Ranch relies on a combination of natural tree canopies along with architectural shade structures that consist of shade sails, pavilions or pergolas to create inviting outdoor environments that encourage year-round activity.

Shade structures should be thoughtfully integrated into parks, playgrounds, plazas, trailheads, and seating areas to enhance the pedestrian experience, reduce heat exposure, and complement the surrounding hardscape and landscape. Their design must reflect the community's commitment to innovation and resiliency by using durable materials, clean contemporary forms, and efficient detailing suited for long-term performance.

Architectural Shade Structure Requirements

- FRC Approval
- Metal construction
- Located within amenity or park spaces that promote congregation
- Seating and activation
- Earth tones and unsaturated color finishes
- Detachable and Stowable in the event of approaching severe weather









Planter Boxes

Planter boxes are versatile hardscape elements that enhance the public realm by introducing greenery, defining space, supporting pedestrian comfort, and reinforcing the community's landscape-driven character. When thoughtfully designed and placed, planter boxes provide opportunities for seasonal color, native plantings, stormwater management, and placemaking within streetscapes, plazas, trails, and civic environments.

Additionally, planter boxes may also serve as passive security features, helping to protect pedestrians, outdoor gathering areas, storefronts, and public spaces by subtly controlling vehicle movement without the visual impact of bollards or barriers. When designed for security purposes, planter boxes must maintain a balance between safety, aesthetics, pedestrian comfort, and placemaking.





Bollards

Bollards provide subtle and effective ways to guide circulation, reinforce pedestrian safety, and protect people and property without detracting from the community's natural and village-inspired character.

Bollards may be used to delineate pedestrian-only areas, calm vehicle movements, protect trail crossings, frame park entrances, or supplement passive security strategies in front of public buildings, plazas, or outdoor gathering spaces. Their purpose is not to dominate the visual environment, but to act as quiet, durable, and well-placed elements that clarify circulation and improve overall safety.

By incorporating bollards strategically and thoughtfully, designers help create a resilient and cohesive public realm that supports safe mobility, enhances placemaking, and aligns with Babcock Ranch's long-term vision for a connected, comfortable, and beautifully designed outdoor environment.



Public Seating

Public seating plays a vital role in creating comfortable, inviting, and walkable outdoor environments throughout Babcock Ranch. As a community built around connectivity, active living, and sustainable placemaking, seating elements must support rest, social interaction, and observation while enhancing the character and usability of streetscapes, parks, plazas, trails, and civic spaces.

Well-planned public seating fosters comfort and relaxation, encourages people to linger, and strengthens the identity of the public realm. Seating should be thoughtfully integrated into the hardscape, located to maximize shade, views, and accessibility, and coordinated with adjacent landscape, lighting, and amenities such as hydration stations, trash and recycling, bike racks, and gathering nodes.







BABCOCK RANCH
FLORIDA

RESIDENTIAL GUIDELINES

Residential Guideline Philosophy

Babcock Ranch is envisioned as a complete and connected residential community founded on sustainability, resiliency, innovation, and thoughtful planning. The residential philosophy of Babcock Ranch is centered on creating neighborhoods that foster long-term quality, enduring value, and a strong sense of place while respecting the natural environment and supporting a modern Southwest Florida lifestyle.

The intent of these Residential Guidelines is not to impose unnecessary architectural restrictions or create repetitive neighborhood design, but rather to establish a flexible framework that promotes high-quality residential development and protects the overall character and value of the community. Individual homes, neighborhoods, and improvements are encouraged to reflect creativity, architectural diversity, and evolving residential design trends, provided such development remains compatible with surrounding properties and contributes positively to the broader Babcock Ranch vision.

Residential design within Babcock Ranch shall emphasize thoughtful integration between architecture, streetscapes, open spaces, trails, and the surrounding environment. Homes and neighborhoods shall be designed to support walkability, neighborhood connectivity, community interaction, and a human-scaled public realm. Streets, sidewalks, trails, and open spaces are intended to function as interconnected elements of a unified community framework that encourages outdoor activity and long-term livability.

Architectural design shall prioritize quality, proportion, durability, and climate-responsive design over rigid stylistic mandates. Contemporary interpretations of traditional Florida architecture, innovative residential design solutions, and individualized architectural expression are encouraged where executed with high-quality materials, thoughtful detailing, and sensitivity to neighboring homes and community character.

Babcock Ranch recognizes that neighborhoods evolve over time, and these Guidelines are intended to accommodate appropriate additions, exterior modifications, and changing residential needs while preserving the integrity and value of surrounding properties. No home, addition, modification, or improvement shall create substantial negative visual impacts, diminish neighborhood character, or adversely affect adjacent property values.

Residential Guideline Philosophy (cont.)

Sustainability and resiliency are foundational principles of the community and shall be incorporated into all residential development. Homes shall support energy efficiency, environmental stewardship, storm resiliency, and long-term operational durability consistent with the vision of America's first solar-powered town.

Residential development shall support dark sky principles through exterior lighting practices that are consistent with the applicable Hardscape Guidelines. Exterior lighting shall be thoughtfully designed to support safety, security, access, and outdoor use while minimizing glare, light trespass, and unnecessary upward illumination. Lighting shall be compatible with the residential character of the neighborhood and shall avoid adverse impacts to neighboring properties, common areas, conservation areas, wildlife corridors, and the overall night-sky environment.

Residential landscape design shall be consistent with the applicable Landscape Guidelines and shall support the broader sustainability, resiliency, and environmental stewardship goals of Babcock Ranch. Landscape improvements should emphasize native, Florida-friendly, drought-tolerant, and climate-appropriate plant materials where appropriate, while reinforcing neighborhood character, supporting water conservation, and maintaining compatibility with the surrounding natural environment.

Collectively, these principles are intended to ensure that Babcock Ranch continues to develop as a cohesive, high-quality, and enduring residential community where individual architectural expression is balanced with neighborhood compatibility, long-term value, and a shared commitment to thoughtful community design.

Legal Notice & Special Exception

Guidelines set forth in this document, and the interpretations of same may be enforced by the Babcock Ranch Community Independent Special District (BRCISD), Founders Review Committee (FRC), Florida Green Build Coalition (FGBC) Certified Professionals and/or their designated representatives.

These entities, mentioned above, bear no liability for, and expressly disclaim any responsibility arising from, the interpretation, application, or reliance upon these design guidelines. Users are solely responsible for independently determining and verifying that their designs comply with all applicable Federal, State, and local laws, regulations and codes, including but not limited to zoning ordinances, building codes, and accessibility requirements.

Special Exception: *FRC reserves the authority to grant all waivers or special exceptions. The intent of these guidelines is to provide direction while encouraging ongoing coordination with the FRC and FGBC professionals throughout the architectural design process to ensure the highest-quality outcomes for Babcock Ranch.*

Glossary

Babcock Overlay Zoning District (BOZD)
Babcock Ranch Community (BRC)
Design Specifications Manual (DSM)
Development of Regional Impacts (DRI)
Florida Green Build Coalition (FGBC)
Founders Review Committee (FRC)
Babcock Ranch Community Independent Special District (BRCISD)
Master Planned Development (MPD)
Babcock Ranch Residential Association (BRRA)
Babcock Property Holdings (BPH)

References

The documents listed below, along with any additional applicable Federal, State, Local, or ISD publications not specifically identified here, take legal precedence over all design guideline content and should be reviewed to inform planning efforts.

- Babcock Ranch Community Master Development of Regional Impact (DRI)_Charlotte County
- Master Development Order (MDO)_Charlotte County
- Babcock Overlay Zoning District (BOZD) documents_Charlotte County
- Babcock Ranch Master Plan Development (MPD)_Lee County
- Charlotte County Zoning and Building Code
- Lee County Zoning and Building Code
- Florida Green Build Coalition (FGBC) Home Standard
- Sierra Club
- Sierra Club Settlement Agreement
- Babcock Ranch Community Independent Special District (BRCISD) Design Specification Manual (DSM)
- Babcock Ranch Residential Association Charter
- South Florida Water Management District (SFWMD) Regulations
- Florida Department of Environmental Protection (FDEP) Regulation

BRCISD Approval Process

Introduction

This document serves as a resource for planners and designers to ensure consistency and alignment across all commercial development within Babcock Ranch. The BRCISD is responsible for verifying that submitted construction documents comply with the BRCISD Design Specifications Manual. The FGBC Consultant ensures that all construction meets or exceeds the requirements for FGBC Bronze certification, while the FRC Consultant reviews each submittal to confirm compliance with landscaping standards and to ensure that architectural design, color, and materials align with Babcock Ranch's established aesthetic criteria.

Review Process

The following is the BRCISD submittal review process for all construction projects within Babcock Ranch.

Pre-Construction Meeting

- The BRCISD, developer and design professionals must meet to clarify the process and discuss conceptual designs to include horizontal planning.

Site Development Plan (SDP) Review

- BRCISD, FGBC, and FRC consultants evaluate the civil site plan, enhanced landscape plan, and checklist for consistency with the Design Specifications Manual and all applicable standards.

Commercial Lot Site Plan Review

- The BRCISD reviews the building site plan comparatively with the approved SDP.
- The FRC reviews all building elevations with proposed colors and materials, and verifies enhanced landscape plans to ensure integrity and compliance.
- The FGBC Commercial checklist is reviewed to ensure the *minimum* Bronze certification requirement is met.

Site Inspection Review

- Site inspections will be conducted, by the BRCISD, throughout the course of the development to ensure compliance with approved plans
- The BRCISD, FGBC and FRC conducts a final walkthrough to ensure substantial completion and compliance of home sites, prior to turnover and receipt of Certificate of Occupancy

Babcock Ranch Development Areas

Babcock Ranch is divided into 3 visually distinct districts that reflect the historical and aspirational goals of the development. Guidelines may evolve to reflect specific geographic and environmental needs. These districts align with the Development of Regional Impact (DRI) Increments for Charlotte County as well as the Master Planned Development (MPD) for Lee County. The following map dictates the divide between these three areas.

Regardless of increment, all residential development at Babcock Ranch must uphold the following core principles:

- Site planning and building design that support storm preparedness, emergency access, drainage performance, and long-term community resiliency.
- Climate-responsive architecture utilizing durable, hurricane-resilient, and flood-conscious construction methods and materials.
- Pedestrian-first site design with shaded, comfortable walking environments
- Architectural excellence rooted in a modern interpretation of Florida vernacular
- Climate-appropriate materials and resilient construction
- Native landscaping and integrated open space that connect to the broader ecological network
- Efficient, screened service and utility areas
- Consistent signage, lighting, and streetscape quality IAW BRCISD Hardscape and Landscape guidelines as well as the BRCISD DSM
- Strong coordination with sustainability standards, including energy-efficient design and Low Impact Design strategies
- Florida Green Build Coalition certification (minimum Bronze)

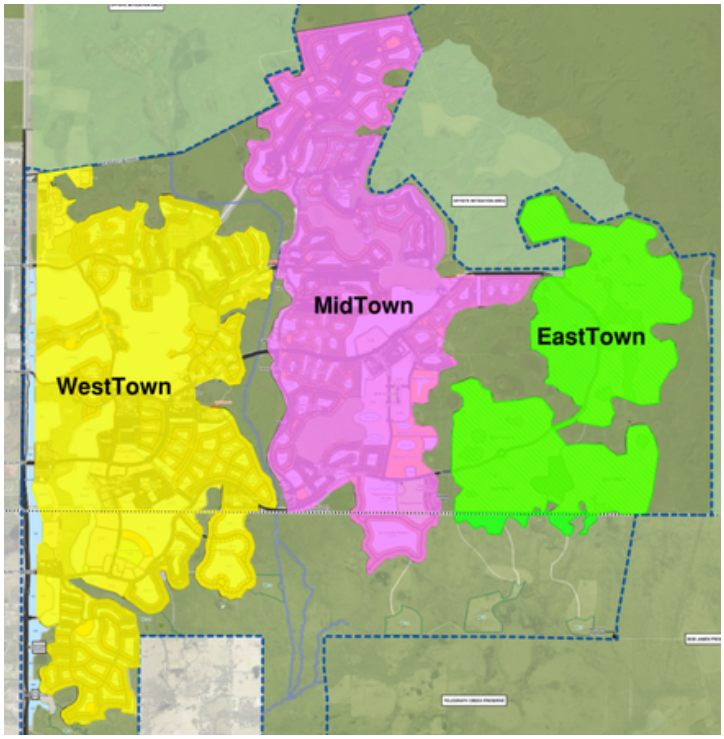

Land Use and Site Planning

Land use and site planning at Babcock Ranch shall reinforce the community's vision as a connected, walkable, and environmentally responsible master-planned town. Residential neighborhoods shall be designed as integrated parts of the larger community fabric, supporting compatibility among land uses, preserving natural systems, and creating attractive, functional places to live. Site planning shall balance development objectives with long-term stewardship, resiliency, and the creation of coherent neighborhood character.

Neighborhoods shall be organized to promote connectivity, legibility, and a strong relationship to the public realm. Streets, open spaces, homesites, trails, and civic or recreational elements shall be arranged to form cohesive and interconnected environments rather than isolated subdivisions. Residential development shall contribute to a continuous network of streets, pedestrian paths, and landscape corridors that strengthen access within neighborhoods and connections to adjacent districts, amenities, and community destinations.

Site plans shall respond to the unique environmental conditions of Southwest Florida and the specific context of Babcock Ranch. Development shall be sensitive to existing topography, drainage patterns, preserves, wetlands, lakes, and native habitat systems. Natural features are to be treated as organizing elements of the plan, not residual areas left after development. Neighborhood design shall respect conservation areas and integrate them into the broader community framework through thoughtful transitions, view corridors, buffers, and open space relationships.

A clear hierarchy of streets, blocks, lots, and open spaces shall be established within each neighborhood. Site planning shall emphasize well-defined streetscapes, consistent building orientation, and coordinated lot layouts that frame the public realm and create visual order. Homes shall front onto public or private streets, greens, paseos, or other intentional open space features wherever appropriate. Reverse frontage conditions, exposed rear lot lines along major roadways, and poorly defined edge conditions shall be avoided unless specifically approved and appropriately screened.

Land Use and Site Planning (cont.)

Residential lots shall be configured to support the intended housing type, architectural character, and functional needs of the neighborhood. Lot dimensions, building setbacks, and lot coverage shall be planned to create consistent streetscapes, appropriate separation between structures, and usable outdoor space. A mix of lot sizes and product types may be permitted where compatible with the approved neighborhood vision and where transitions between densities and intensities are carefully considered. Changes in scale between different residential types or adjacent land uses shall be managed through lot arrangement, landscape design, setbacks, open space, and other appropriate buffering strategies.

Site planning shall prioritize walkability and pedestrian comfort. Sidewalks, multi-use paths, trails, and pedestrian connections shall be incorporated as fundamental planning elements, not as secondary features. Builders and developers shall connect residential neighborhoods, lots, common areas, and community amenities to adjacent or nearby trail systems where feasible and appropriate based on land use, site conditions, access, safety, ownership, and applicable planning requirements. Neighborhood design shall provide safe, direct, and convenient pedestrian access to parks, preserves, schools, civic uses, village centers, trail systems, and other community amenities where applicable. Blocks shall be designed to avoid excessive walking distances, and pedestrian routes shall be enhanced through shade, landscaping, visual interest, and connectivity to common open spaces.

Open space shall be intentionally integrated into the structure of each neighborhood. Greens, pocket parks, common landscape areas, natural preserves, lakes, and stormwater features shall be planned as usable and visually meaningful amenities that contribute to neighborhood identity and quality of life. Stormwater systems shall be designed to serve both functional and aesthetic purposes where appropriate, with forms, edges, planting, and relationships to adjacent development carefully considered. Open spaces shall be distributed and connected in a manner that supports recreation, passive enjoyment, habitat value, and overall community continuity.

Land Use and Site Planning (cont.)

Site layout shall also address resiliency and long-term performance in accordance with applicable regulatory requirements, Babcock Ranch community standards, and the applicable provisions of the Babcock Ranch Design Specifications Manual. Babcock Ranch standards shall serve as the minimum community baseline, and where regulatory requirements, community standards, or Design Specifications Manual requirements are more stringent, the more stringent requirement shall apply. Finished floor elevations shall be established in accordance with applicable regulatory requirements and Babcock Ranch standards, and in no case shall finished floor elevations be less than eighteen (18) inches above the crown of the adjacent roadway unless a more stringent requirement applies. Grading and drainage design shall be coordinated with lot layout, roadway design, and stormwater systems to ensure proper function, minimize adverse impacts to adjoining properties, and support storm resilience. Development shall account for emergency access, utility placement, service functions, and maintenance needs without compromising the visual and functional quality of the neighborhood.

Table 1 MURC Development Standards

Land Use	Min. Lot Area (sq ft.)	Min. Setbacks (ft)(1)			Max Height (ft.)	Min. Off-street Parking Spaces (per DU for residential or per 300 s.f. for non-residential (10)
		Front	Side	Rear		
TOWN CENTER						
Residential						
Single-Family, Detached	3,000	10 (5)	5 (2)	4	45	1
Single-Family, Attached or Two-Family	1,000	10 (5)	0 (3)	4	60	1
Multi-Family	1,000	10 (5)	10	4	100	1-1.5 (9)
Mixed-Use / Amenity / School (4)(11)						
Single-Family, Attached or Two-Family	1,000	10 (5)	0 (3)	4	60	1
Multi-Family	1,000	10 (5)	5 (2)	4 (12)	100	1-1.5 (9)
Mixed Use	1,000	10 (5) (7)	5 (2)	4 (12)	140	1 (9)
Non-Residential	1,000	10 (5) (7)	0 (3)	4 (12)	140	1
VILLAGES						
Residential						
Single-Family, Detached (small lots)	3,000	10 (5)	5 (2)	4	45	1
Single-Family, Detached (large lots)	4,000	10 (5)	5 (2)	4	45	1
Single-Family, Attached or Two-Family	1,000	10 (5)	0 (3)	4	60	1
Multi-Family	1,000	10 (5)	10	4	100	1-1.5 (9)

Table 1 MURC Development Standards (cont.)

Land Use	Min. Lot Area (sq ft.)	Min. Setbacks (ft)(1)			Max Height (ft.)	Min. Off-street Parking Spaces (per DU for residential or per 300 s.f. for non-residential (10)
		Front	Side	Rear		
VILLAGE Center (11)						
Single-Family, Detached (small lots)	3,000	10 (5)	5 (2)	4	45	1
Single-Family, Detached (large lots)	4,000	10 (5)	5 (2)	4	45	1
Single-Family, Attached or Two-Family	1,000	10 (5)	0 (3)	4	60	1
Multi-Family	1,000	10 (5)	10	4	100	1-1.5 (9)
Mixed Use	1,000	10 (5) (7)	5 (2)	4 (12)	140	1 (9)
Non-Residential	1,000	10 (5) (7)	0 (3)	4 (12)	140	1
HAMLETS						
Residential						
Single-Family, Detached (small lots)	3,000	20 (6)	7.5	20 (6)	45	1
Single-Family, Detached (large lots)	4,000	20 (6)	10	20 (6)	45	1
Single-Family, Attached or Two-Family	1,000	20 (6)	0 (3)	20 (6)	60	1
Multi-Family	1,000	20 (6)	10	20 (6)	60	1-1.5 (9)

Table 1 MURC Development Standards (cont.)

Land Use	Min. Lot Area (sq ft.)	Min. Setbacks (ft)(1)			Max Height (ft.)	Min. Off-street Parking Spaces (per DU for residential or per 300 s.f. for non-residential (10)
		Front	Side	Rear		
VILLAGE Center (11)						
Single-Family, Detached (small lots)	3,000	10 (5)	5 (2)	4	45	1
Single-Family, Detached (large lots)	4,000	10 (5)	5 (2)	4	45	1
Single-Family, Attached or Two-Family	1,000	10 (5)	0 (3)	4	60	1
Multi-Family	1,000	10 (5)	10	4	100	1-1.5 (9)
Mixed Use	1,000	10 (5) (7)	5 (2)	4 (12)	140	1 (9)
Non-Residential	1,000	10 (5) (7)	0 (3)	4 (12)	140	1
HAMLETS						
Residential						
Single-Family, Detached (small lots)	3,000	20 (6)	7.5	20 (6)	45	1
Single-Family, Detached (large lots)	4,000	20 (6)	10	20 (6)	45	1
Single-Family, Attached or Two-Family	1,000	20 (6)	0 (3)	20 (6)	60	1
Multi-Family	1,000	20 (6)	10	20 (6)	60	1-1.5 (9)

Table 1 MURC Development Standards (cont.)

Land Use	Min. Lot Area (sq ft.)	Min. Setbacks (ft)(1)			Max Height (ft.)	Min. Off-street Parking Spaces (per DU for residential or per 300 s.f. for non-residential (10)
		Front	Side	Rear		
Neighborhood Center (8)						
Non-Residential	No less than min. lot area of the smallest abutting lot	Equal to the smallest of the adj. lots	10	20	45	1
Mixed Use	No less than min. lot area of the smallest abutting lot	Equal to the smallest of the adj. lots	10	20	38	1 (9)

Table 1 MURC Development Standards (cont.)

DEVELOPMENT STANDARD NOTES:

1. Unless otherwise noted, setbacks apply to principal and accessory structures. Structures will comply with sight distance requirements. Building separation shall be at least 10 ft., subject to access requrieements for emergency services and fire code.
2. Side setback may be reduced as long as sum of side setbacks is 10 ft. minimum
3. Setback applies to interior lots. If not connected to an adjoining structure, side setback is 5' which may be reduced as long as sum of side setbacks is 10 Ft. minimum.
4. Schools are exempt from this setback table, school development is according to Charlotte County School District Policy
5. Encroachments into front yards are allowed for porches, stoops, awnings, colonnades, or other elements that serve as transition from the public to private realm.
6. It must be demonstrated that driveways can accommodate space for parking for at least two vehicles on the driveway without overhanging on the adjoining sidewalk or onto vehicle travel way where no sidewalk exists. If on-street parking spaces are available in the right-of-way within 300 ft., on-street parking may substitute for driveway parking.
7. Building entrances are required on the primary street.
8. Maximum area per us is 3,000 s.f. total neighborhood. Total neighborhood goods and services permitted in one location is 15,000 s.f.
9. Mult-Family buildings with 2 or less bedrooms per unit shall require 1 space per unit. Multi-Family buildings with 3 or more bedrooms per unit shall require 1.5 spaces per unit.
10. The amount of required parking may be determined through a parking analysis submitted with a site plan application
11. At the Town Center entries, the shopping and entertainment areas shall be set back a minimum of 100 ft. from the ultimate road right of way of SR31. For the remainder of the Town Center, the shopping and entertainment areas shall be set back a minimum of 250 ft. from the ultimate right of way of SR 31. The shopping and entertainment areas of the villages and hamlets shall be located in the interior portion of those areas (Ref. Sierra Club Settlement Agreement Sec. B.8)
12. Encroachments are allowed for structures such as boardwalks, docks and accessory structures providing views and access to water, subject to approval from agencies and jurisdictions.

Setbacks from preserves internal to the project contain a 25 ft. wide upland buffer, setbacks from these preserves shall be measured from the wetland line identified on the plat and not from the external boundary of the preserve

Architectural Philosophy

The architectural vision for Babcock Ranch is intended to promote high-quality residential design while allowing flexibility, individuality, and architectural diversity throughout the community. The intent of these Guidelines is not to impose unnecessary stylistic restrictions, but rather to establish a cohesive framework that protects neighborhood character, promotes thoughtful community design, and preserves long-term property values.

Residential architecture within Babcock Ranch may incorporate a variety of architectural expressions, materials, and design approaches provided such designs are compatible with the overall character and quality of the community and do not create adverse visual impacts on neighboring homes or public spaces.

The Founders Review Committee (FRC) and Master Developer shall evaluate proposed homes, additions, exterior modifications, and neighborhood improvements based on their overall compatibility with adjacent properties, streetscapes, and the broader Babcock Ranch vision. Emphasis shall be placed on quality of design, scale, proportion, material consistency, durability, and integration with the surrounding environment rather than strict replication of predetermined architectural styles.

Architectural creativity and innovation are encouraged where such designs contribute positively to the community and maintain compatibility with surrounding development. Contemporary interpretations of traditional Florida architecture, evolving residential trends, and unique design solutions may be considered appropriate when executed with high-quality materials, thoughtful detailing, and sensitivity to neighboring properties.

No home, addition, modification, or improvement shall be approved that, in the opinion of the Master Developer or FRC, creates a substantial negative visual impact, diminishes the architectural integrity of the neighborhood, adversely affects adjacent property values, or conflicts with the overall design intent of Babcock Ranch.

These Guidelines are therefore intended to function as a flexible design framework that balances architectural freedom with long-term community quality, neighborhood compatibility, and enduring value.

Architectural Guiding Principles

Architecture at Babcock Ranch shall reflect the community's commitment to sustainability, resiliency, and high-quality placemaking. Buildings shall be designed to be cohesive, human-scaled, climate-responsive, and supportive of walkability.

Architectural character shall be rooted in a contemporary Southwest Florida vernacular, emphasizing simplicity, durable materials, passive design strategies, and a strong connection between indoor and outdoor living.

These guiding principles establish the design framework for all residential architecture and are intended to ensure consistency, quality, and long-term value throughout the community.

Human-Scaled Design and Walkability

Architecture shall reinforce the pedestrian experience through proportion, articulation, and visual engagement at the street level.

- Primary façades shall include articulation through projections, recesses, and material changes
- Porches, stoops, and entries shall be incorporated to create human-scaled transitions
- Blank walls along public streets and open spaces are prohibited
- Building elements shall be proportioned to relate to the pedestrian, not just the automobile

Climate-Responsive and Sustainable Design

Architecture shall respond to the Southwest Florida climate through passive and active design strategies that reduce energy demand and enhance comfort.

- Roof overhangs, shading devices, and covered outdoor spaces shall be incorporated
- Building orientation shall consider solar exposure where feasible
- Natural daylighting shall be utilized while minimizing heat gain
- Roofs shall be designed to be solar-ready
- Materials shall support energy efficiency and long-term durability

Cohesive Architectural Identity

All residential architecture shall contribute to a unified community character while allowing for variation within a consistent design language.

- Massing, roof forms, and proportions shall be consistent within neighborhoods
- Color palettes and material selections shall be coordinated across adjacent homes
- Repetition of identical elevations along a streetscape shall be avoided
- Architectural styles shall align with the Babcock Ranch design vision and approved styles

High-Quality Materials and Craftsmanship

Buildings shall be constructed using durable, climate-appropriate materials that ensure long-term performance and visual quality.

- Exterior materials shall be resistant to moisture, heat, and corrosion
- High-performance cladding and long-lasting finishes shall be used
- Materials shall be applied authentically and consistently

Architectural Guiding Principles (cont.)

Strengthen the Public Realm

Architecture shall define and enhance streets, open spaces, and neighborhood edges to support social interaction and community life.

- Primary façades and entrances shall face streets, greens, or open spaces
- Buildings shall frame public spaces and contribute to a defined streetscape
- Outdoor elements such as porches, seating areas, and shaded spaces are encouraged
- Garage dominance along streets shall be minimized through design

Clear Wayfinding and Legibility

Buildings shall be designed to be intuitive and easily understood, with clear entry points and logical organization.

- Primary entrances shall be clearly visible and emphasized
- Circulation patterns shall be simple and logical
- Architectural elements shall reinforce orientation and identity

Indoor-Outdoor Living Integration

Architecture shall promote a strong connection between indoor and outdoor spaces, reflecting the lifestyle and climate of Southwest Florida.

- Porches, lanais, and covered outdoor living areas shall be incorporated
- Openings and transitions between interior and exterior spaces shall be emphasized
- Outdoor spaces shall be designed for usability, comfort, and shade
- Views to open space, water, or landscape features shall be considered

Resiliency and Durability

Architecture shall be designed to withstand the environmental conditions of Southwest Florida while maintaining long-term performance.

- Materials and assemblies shall resist wind, moisture, and heat
- Roof systems and building components shall be designed for durability
- Architectural detailing shall mitigate water intrusion
- Design shall support long-term maintenance and performance

Innovation and Forward-Thinking Design

Architecture shall reflect the innovative and forward-thinking character of Babcock Ranch.

- Integration of smart home technologies
- Buildings shall be designed to accommodate future energy systems and technologies
- Contemporary interpretations of Florida vernacular design are encouraged
- Design solutions shall prioritize efficiency, adaptability, and long-term relevance

Architectural design at Babcock Ranch shall create a cohesive, climate-responsive, and enduring built environment rooted in the principles of sustainability, walkability, and high-quality placemaking. By integrating these guiding principles into each home and neighborhood, development contributes to a unified community identity and an enhanced quality of life for residents.

Florida Green Home Standards

Babcock Ranch is founded on principles of sustainability, resiliency, and long-term environmental stewardship. All residential development shall incorporate high-performance building practices aligned with the *Florida Green Building Coalition (FGBC) Green Home Standard*.

The intent of this section is to establish a consistent, enforceable framework that ensures all homes achieve measurable performance in energy efficiency, water conservation, indoor environmental quality, and durability while maintaining constructability for production builders.

Certification Requirements

- All homes shall achieve a minimum of FGBC Certified (Bronze or higher).
- Certification shall be verified by an approved FGBC Green Verifier.
- Homes shall meet or exceed the FGBC minimum category thresholds and total point requirements.
- Documentation of compliance shall be submitted to BRCISD for record.

Required Performance Category

All homes shall comply with FGBC requirements across the following categories:

- Energy
- Water
- Lot Choice
- Site
- Health (Indoor Environmental Quality)
- Materials
- Disaster Mitigation
- General / Innovation
- HERS minimum rating <80

Water Efficiency

Water Efficiency

- Low-flow plumbing fixtures:
  - Showerheads ≤ 2.0 gpm
  - Faucets ≤ 1.5 gpm
  - Toilets ≤ 1.28 gpf
- Compact hot water distribution systems
- Florida-Friendly Landscaping required
- Drought-tolerant plant material required
- Turf limited and not permitted in shaded or inappropriate areas
- Irrigation systems shall meet FGBC efficiency standards or incorporate advanced technology

Florida Green Home Standards (cont.)

Site and Landscape Design

- Development within a planned green community (Babcock Ranch credit)
- Erosion control and soil stabilization required during construction
- Stormwater runoff management integrated into site design
- Preservation or enhancement of pervious surfaces where feasible
- Landscaping shall support water quality and aquifer recharge
- Turf grass and sod shall be limited to appropriate functional use areas and shall comply with the ***Landscape Guidelines.***

Indoor Environmental Quality

- Low or zero VOC paints, coatings, and finishes
- Mechanical ventilation systems required
- Kitchen and bathroom exhaust vented to exterior
- Moisture control measures required at slab and foundation
- HVAC filtration systems and accessible filters required
- Pest management integrated into construction

Materials and Resource Efficiency

- Use of durable, climate-appropriate materials
- Construction waste management plan required
- Efficient framing practices encouraged
- Locally sourced or regionally appropriate materials encouraged
- Eco-friendly insulation and finishes recommended

Disaster Mitigation & Resiliency

- Impact-resistant windows and doors required
- Roof systems designed for high wind resistance
- Secondary water barrier at roof required
- Proper anchoring of exterior equipment and structures
- Positive site drainage away from structures required
- Finished floor elevation shall be elevated above base flood conditions in accordance with community standards (min. 18" above centerline of adjacent roadway)

General Sustainability Measures

- Builder shall provide homeowner education materials
- Homes shall be designed for long-term adaptability and efficiency
- Optional renewable energy readiness encouraged (solar-ready provisions)
- Electric vehicle charging readiness is ***required in garages.***

Performance Expectations

- Homes shall be designed to minimize energy consumption and peak demand.
- Water use shall be reduced through efficient fixtures and landscape design.
- Materials and systems shall be selected for durability in Florida’s climate.
- Design shall prioritize passive strategies where feasible (shade, orientation, ventilation).

Utility Infrastructure Planning

Utility infrastructure at Babcock Ranch shall be thoughtfully integrated into the community fabric in a manner that supports long-term operational reliability, resiliency, sustainability, and neighborhood character. Utility systems shall be planned and designed to ensure uninterrupted service access, maintenance accessibility, future system expansion, and compatibility with adjacent residential development.

All utility infrastructure shall comply with the latest edition of the Babcock Ranch Community Independent Special District Design and Specification Manual ("DSM"), applicable utility provider standards, Development Orders, permitting agency requirements, and all applicable federal, state, and local regulations.

Guiding Principles

Residential communities shall incorporate utility infrastructure in a manner that:

- Preserves uninterrupted operational and maintenance access
- Minimizes visual impacts to public streets and residential lots
- Integrates utility sites into the landscape and architectural character of the community
- Supports emergency operations and storm resiliency
- Allows for future utility system expansion and regional infrastructure needs
- Protects public health, safety, and environmental quality
- Coordinates utility systems with trails, open space, roadways, and drainage infrastructure
- Maintains compatibility between utility infrastructure and pedestrian-oriented environments

Utility Easements

Dedicated utility easements shall be provided as required by the DSM and utility providers.

Standards

- Utility easements shall remain free of permanent encroachments.
- Structures, walls, pools, foundations, accessory buildings, and other permanent improvements shall not obstruct maintenance access.
- Landscape improvements within utility easements shall be designed to permit utility access and replacement.
- Future utility corridor extensions shall be preserved where identified by the District.
- Easements shall remain accessible during all phases of development and after project completion.

Lift Stations & Utility Sites

Lift stations and utility sites are critical components of the infrastructure system supporting the long-term operation, resiliency, and sustainability of Babcock Ranch. These facilities shall be carefully integrated into residential neighborhoods in a manner that minimizes visual impacts, preserves neighborhood character, ensures operational accessibility, and supports future infrastructure needs.

All lift stations, utility compounds, and associated infrastructure shall comply with the latest edition of the Babcock Ranch Community Independent Special District (BRC ISD) Design & Specification Manual ("DSM"), utility provider requirements, and applicable permitting agency standards.

Preferred Location Standards

Lift stations and utility sites should be located:

- Adjacent to collector or arterial roadways
- Along utility corridors
- Adjacent to open space or landscape buffer areas
- Outside primary neighborhood focal points
- Away from prominent pedestrian gathering areas

Utility Easements & Access

- Utility easements shall comply with all minimum dimensional requirements established by the DSM.
- Utility access shall remain unobstructed at all times.
- Permanent structures, walls, accessory buildings, pools, or other encroachments within utility easements are prohibited unless expressly approved.
- Maintenance and emergency access shall be preserved throughout all phases of development.
- Lift station sites shall accommodate maintenance vehicles, emergency operations, and future equipment replacement.
- Gated neighborhoods shall provide utility operators with unrestricted emergency access to all utility infrastructure.

Screening & Visual Integration

All lift stations and utility sites shall be screened from public streets, trails, parks, open spaces, and adjacent residential lots. Screening may include:

- Decorative masonry walls
- Architectural fencing
- Berms
- Native landscaping
- Integrated landscape buffers
- Combination screening systems

Lift Stations & Utility Sites (cont.)

Architectural Compatibility

- Screening walls and fencing shall be architecturally compatible with the surrounding neighborhood character.
- Materials, colors, and finishes shall coordinate with adjacent residential architecture.
- Utility compounds shall avoid unfinished or industrial appearances.
- Utility equipment shall be integrated into the overall neighborhood design to the greatest extent practical.

Landscape Buffers

- Enhanced landscape buffering shall be provided adjacent to residential lots.
- Landscape materials shall comply with the Landscape Guidelines.
- Planting design shall maintain visibility and access for utility operations and maintenance.
- Landscaping shall not obstruct ventilation, telemetry equipment, or maintenance access.

Future Expansion

- Site planning shall accommodate future utility expansion.
- Utility corridors and easements shall preserve future regional infrastructure connections.
- Development shall not preclude future operational upgrades or utility extensions.

Prohibited Conditions

- Unscreened utility equipment visible from public frontages
- Utility sites lacking maintenance access
- Encroachments within utility easements
- Chain-link fencing visible from public streets unless operationally required
- Utility sites creating nuisance conditions
- Placement of utility infrastructure within primary civic or neighborhood focal spaces

Resiliency and Flood Protection Requirements

Resiliency and flood protection are fundamental to the long-term performance and safety of residential development at Babcock Ranch. Located in Southwest Florida, the community is designed to respond to the realities of heavy rainfall, high winds, and evolving climate conditions. Residential site planning, architecture, and landscape design must work together to reduce risk, protect property, and ensure continuity of use during and after storm events.

Homes and neighborhoods shall be planned with a proactive approach to water management, structural durability, and environmental adaptation *in accordance with Babcock Ranch standards*. These requirements are intended not only to meet regulatory standards, but to exceed them to support a resilient and enduring community that will last for all future generations.

Building Elevation

Proper building elevation is the most critical component of flood protection. All residential structures shall be elevated to reduce the risk of water intrusion and long-term damage.

Finished floor elevations must be carefully coordinated with roadway profiles, site grading, and stormwater systems. ***At a minimum, all dwelling structures shall maintain a finished floor elevation no less than eighteen (18) inches above the crown of the adjacent roadway***.

Elevation strategies shall ensure that water flows away from structures and does not create adverse impacts to adjacent properties or public infrastructure.

Stormwater Integration

Stormwater management systems are a defining feature of Babcock Ranch and shall be fully integrated into residential planning and design. Rather than being treated as isolated infrastructure, lakes, ponds, wetlands, preserves, and drainage systems shall function as part of a connected environmental and community framework, supporting both performance-driven systems and visually meaningful community amenities.

Neighborhood design shall incorporate stormwater features that support water quality, storage, and conveyance while also contributing to the visual character of the community. Where appropriate, Low-Impact Development (LID) strategies such as bioswales, rain gardens, and vegetated drainage areas should be used to enhance infiltration and reduce runoff.

Wind and Structural Resilience

All homes at Babcock Ranch shall be designed and constructed to withstand high wind events consistent with Florida Building Code requirements. Structural systems, roof assemblies, and building components must be designed to resist uplift, water intrusion, and wind-driven debris.

Impact-resistant materials, secure connections, and reinforced assemblies shall be utilized where required to ensure long-term durability and occupant safety.

Resiliency and Flood Protection Requirements (cont.)

Site Drainage and Grading

Effective drainage is essential to the performance of each homesite and the neighborhood as a whole. Sites shall be graded to provide positive drainage away from buildings, with continuous flow paths directing water toward inlets, swales, or stormwater systems.

Drainage design must be coordinated across property lines to avoid isolated low points, ponding conditions, or runoff impacts to neighboring lots. Swales, yard slopes, and drainage easements shall be designed as functional elements of the site, capable of performing during both typical rainfall and major storm events.

Grading shall also support usable outdoor space, maintaining both function and livability while ensuring proper drainage performance.

Building Design and System Protection

Residential structures shall be designed to minimize vulnerability to water intrusion and storm-related damage. This includes the use of durable materials, proper sealing of the building envelope, and thoughtful placement of building components.

Critical systems—including electrical panels, HVAC equipment, and water heaters—shall be elevated or otherwise protected to prevent damage during flooding events. Building entries, garage thresholds, and transitions between indoor and outdoor spaces shall be designed to limit water intrusion.

Homes shall also incorporate construction practices and detailing appropriate for high humidity, heavy rainfall, and prolonged exposure to moisture.

Landscape and Environmental Resilience

Landscape design plays a critical role in overall resiliency. Native and adaptive plant species shall be used to create landscapes that can tolerate periodic flooding, drought conditions, and storm events in accordance with ***Babcock Ranch Landscape Guidelines*** requirements (75% Residential Lots, 90% Commercial, 100% (Common Area, Open Space, Verges, etc.).

Trees and planting shall be selected and placed to withstand wind conditions while contributing to shade, soil stability, and microclimate comfort. Landscape systems shall also support drainage by stabilizing soils and reducing erosion.

Potable water use for landscaping is strictly prohibited. Reclaimed minimized through native plant selection, efficient irrigation systems, and elimination of non-functional turf.

Long-Term Performance

Resiliency extends beyond initial construction. Residential development shall be designed with long-term performance in mind, including durability of materials, ease of maintenance, and the ability to recover quickly after storm events.

Site planning, building systems, and landscape design shall work together to create homes and neighborhoods that remain functional, safe, and visually cohesive over time.

Energy and Sustainability Design Requirements

Sustainability is a foundational requirement of Babcock Ranch and shall be fully integrated into the planning, design, and construction of all residential development. As America's first solar-powered town, Babcock Ranch is committed to advancing environmentally responsible development practices that promote energy efficiency, resource conservation, resiliency, and long-term community health.

These Sustainability Requirements establish mandatory minimum standards for green building and environmental performance for all residential product types, including single-family homes, villas, townhomes, and multi-family residential units, consistent with Florida Building Code residential permitting.

All residential development shall comply with these requirements in addition to all applicable provisions of the Babcock Ranch Master Development Order, Design Specifications Manual (DSM), and governing regulatory agencies.

Florida Green Build Certification Requirements

All residential dwelling units within Babcock Ranch shall be certified through a third-party verification process under the Florida Green Building Coalition (FGBC) Green Home Standard at a minimum Bronze level.

All FGBC checklist items identified as mandatory (highlighted "Green") shall be incorporated into the design and construction of each dwelling unit. These items are required and are directly tied to the Babcock Ranch Master Development Order.

The Builder shall be solely responsible for registration, documentation, coordination with the FGBC certifying agent, and achieving final certification.

Final certification documentation shall be submitted prior to issuance of Certificate of Occupancy.

The Master Developer reserves the right to require higher certification levels or additional sustainability measures for specific neighborhoods, product types, or development phases.

Energy Efficiency and Building Performance

Energy efficiency, resource conservation, and high-performance building design are fundamental to the identity and long-term success of Babcock Ranch. As America's first solar-powered town, residential development shall incorporate strategies that reduce energy consumption, enhance indoor comfort, and improve long-term durability.

Homes shall be designed as integrated systems—where site planning, architecture, building envelope, and mechanical systems work together to optimize performance. The following requirements align directly with the Florida Green Building Coalition (FGBC) Green Home Standard and contribute to certification compliance.

Building Envelope and Thermal Performance

The building envelope is the primary determinant of energy performance and indoor comfort. Homes shall incorporate high-performance envelope systems designed to minimize heat gain, air infiltration, and moisture intrusion.

Design strategies should consider:

- Enhanced insulation exceeding minimum code requirements
- Continuous air sealing and tight building construction
- High-performance windows and exterior doors
- Low-Emissivity (Low-E) glazing to reduce solar heat gain
- HERS Rating index requirements <80

Envelope performance shall support FGBC energy efficiency credits while also contributing to improved indoor air quality and moisture control.

Solar Orientation and Shading

Homes shall be designed to respond to solar orientation and local climate conditions. Building placement and façade design should minimize east and west solar exposure where feasible.

Passive design strategies shall include:

- Roof overhangs and shading devices
- Covered porches and entries
- Strategic window placement

These measures reduce cooling demand, improve comfort, and contribute to FGBC energy performance and site design credits.

Appliances and Equipment

All appliances shall meet or exceed recognized energy efficiency standards.

Energy-efficient appliances contribute to reduced household energy consumption and support FGBC certification requirements related to equipment performance.

Energy Efficiency and Building Performance (cont.)

Mechanical, Electrical, and Plumbing Systems

Mechanical, electrical, and plumbing systems shall be designed for high efficiency and long-term performance.

Requirements include:

- High-efficiency HVAC systems properly sized for each home
- Systems designed to manage humidity effectively
- Sealed ductwork located within conditioned space where feasible
- Energy-efficient water heating systems
- LED lighting throughout all residential units

Smart controls, programmable thermostats, and advanced system controls are strongly encouraged to further support FGBC energy efficiency credits.

Water Heating and Plumbing Efficiency

Water heating systems shall be energy-efficient and properly sized.

Plumbing fixtures and systems shall:

- Reduce water consumption
- Support FGBC Water Efficiency credits
- Utilize WaterSense-certified fixtures or equivalent

Durability and Long-Term Performance

Homes shall be designed for long-term durability in Southwest Florida's climate.

Materials and systems shall:

- Resist heat, humidity, and moisture
- Require minimal maintenance
- Provide long service life
- Durable construction reduces lifecycle environmental impacts and supports FGBC Materials & Resources credits.

Energy efficiency and building performance at Babcock Ranch are achieved through a comprehensive approach that integrates passive design strategies, high-performance systems, and durable materials. By aligning residential design with FGBC categories—including Energy Efficiency, Water Efficiency, Indoor Air Quality, Materials & Resources, Site Design, and Innovation—each home contributes to a more sustainable, resilient, and high-performing community.

Trail Connectivity

A continuous and interconnected trail network is a defining feature of Babcock Ranch and is essential to supporting walkability, recreation, and community connectivity. These guidelines establish the requirements for integrating neighborhood development with the broader Babcock Ranch trail system.

All neighborhood developers shall design and construct their projects to contribute to and enhance the overall trail network, ensuring seamless connectivity between neighborhoods, open spaces, amenities, and community destinations. These connections shall align with existing, planned, and future trail corridors as identified by the Master Developer and shall ensure continuity of trail segments across property boundaries.

Pedestrian connectivity is a fundamental community requirement. Sidewalks and multi-use paths within Babcock Ranch are intended to function as part of a unified public circulation system. Accordingly, pedestrian access shall be maintained throughout all neighborhoods, including gated or private communities. Gated entry features shall be designed to ***allow continuous pedestrian and bicycle access, and no development shall restrict or impede the general public's ability to utilize the sidewalk and trail system.***

Neighborhood developers shall accommodate trail connections by:

- Dedicating or reserving trail easements or corridors where required
- Demonstrating future connection points on all site plans submitted for review
- Ensuring that no building, structure, or infrastructure placement precludes future trail connectivity

Failure to provide for required trail connections or to maintain pedestrian continuity shall be grounds for denial of FRC approval.

Trail connectivity is a critical component of the Babcock Ranch community framework. All development shall contribute to a cohesive and continuous trail system that supports walkability, recreation, and long-term community connectivity.

Future Trail Connectivity

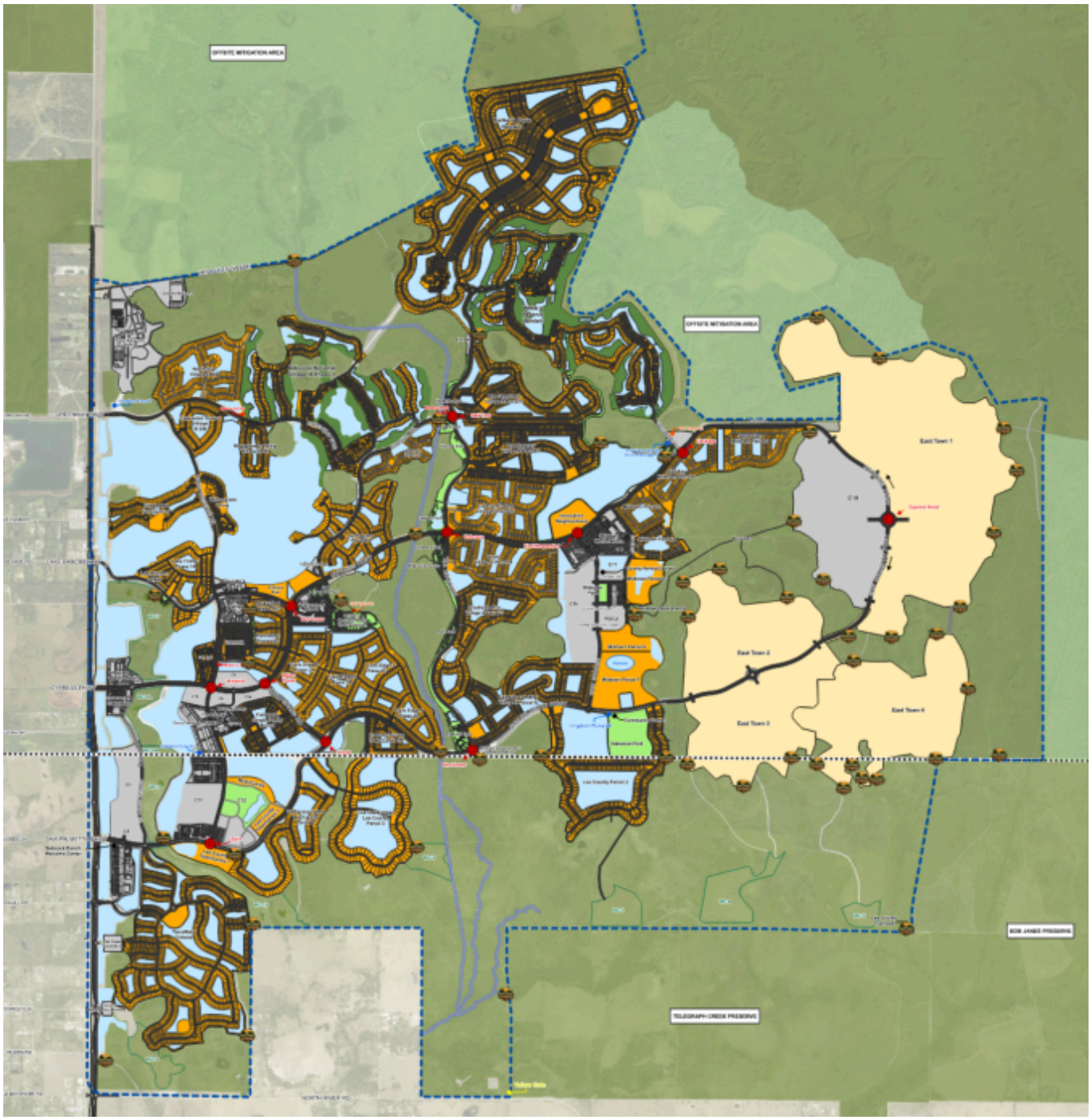

Solid Waste Access and Circulation

Residential site planning must prioritize safe circulation, efficient service access, sustainable design practices, high-quality public edges, and full compliance with the BRCISD Design Specifications Manual. The following requirements establish the minimum standards for layout, access, solid waste service, and functional site organization across all commercial development types.

Lee County Projects must reference Lee County Zoning Code, Charlotte County Projects must reference the BRCISD DSM for compliance

Dumpster Enclosure Design Principles

- Dumpster enclosure locations must be clearly identified and labeled on the site plan (DSM Solid Waste Section, p. 3)
- All site plans must include a solid waste truck routing plan showing clear access from the collector road to every enclosure location
- Plan submittals must include scaled detail blow-ups showing drive aisle widths, clearances, dumpster dimensions, and turn radii at no larger than 1" = 30'
- Dumpsters may not be placed beneath overhead structures, canopies, or wires; a minimum 10-foot offset is required from any overhanging element
- Collection vehicle circulation must allow forward vehicle entry and forward vehicle exit, with backing movements restricted to container servicing only

Auto-turn Principles

- AutoTURN or equivalent turning movement diagrams must be provided for each enclosure to demonstrate unobstructed maneuvering
- 60 feet of clear space must be provided directly in front of service or enclosure locations to allow safe maneuvering
- All turns along the collection route must maintain a minimum 50-foot turning radius free of obstructions

Typical Collection Truck Dimensions (approximate)	
Length	10.0 m - 12.4 m
Width	3.2 m
Minimum inside turning radius	10.0 m
Minimum outside turning radius	12.8 m
Height clearance	6.5 m - 7.5 m
Width clearance	4.0 m
Length clearance	15.2 m

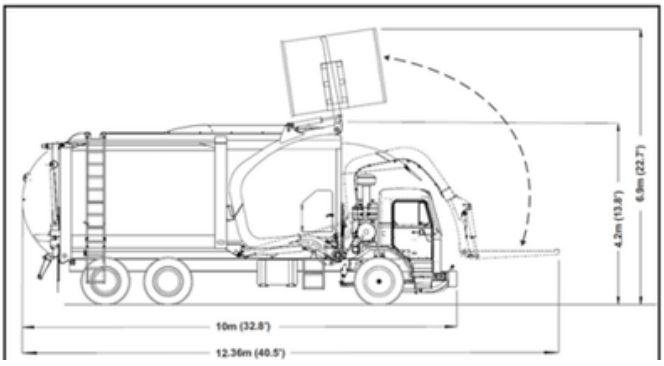

Emergency Access and Circulation

Site plans shall be designed to provide safe, efficient, and reliable emergency access throughout all residential development within Babcock Ranch. Emergency access systems shall support rapid response by fire rescue, emergency medical services, law enforcement, utility operators, and other emergency personnel while maintaining compatibility with the pedestrian-oriented and residential character of the community.

All emergency access and circulation systems shall comply with the requirements of the Babcock Ranch Community Independent Special District (BRC ISD), applicable provisions of the Design & Specification Manual ("DSM"), Charlotte County and Lee County Fire & EMS requirements, the Florida Fire Prevention Code (FFPC), and all applicable local, state, and federal regulations.

Design Principles

Emergency access shall be incorporated early into neighborhood planning and maintained throughout all phases of design, permitting, construction, and operation.
Residential communities shall be designed to:

- Provide unobstructed emergency vehicle access to all structures
- Support safe and efficient fire apparatus circulation
- Minimize conflicts between emergency vehicles, pedestrians, and service operations
- Maintain emergency access during storm events and utility outages
- Coordinate emergency access with gates, trails, utilities, and open space systems
- Preserve emergency responder visibility and maneuverability throughout neighborhoods

All buildings shall remain accessible by fire apparatus at all times.

Emergency Access Routes

- Emergency access routes shall remain clear and unobstructed at all times.
- No parking, loading, storage, landscaping, signage, walls, gates, or site furnishings shall obstruct required emergency access routes.
- Emergency access roads shall be designed to support the weight and operational requirements of emergency response vehicles.
- Emergency access routes shall maintain required vertical and horizontal clearances in accordance with applicable fire code requirements.
- Dead-end roadways shall comply with all applicable turnaround and fire apparatus access requirements.
- Emergency access easements may be required where determined necessary by the Authority Having Jurisdiction (AHJ), BRC ISD, or the Master Developer.

Emergency Access and Circulation

Gated Neighborhoods

- Gated neighborhoods shall provide approved emergency access systems for all emergency responders and utility operators.
- Gates shall comply with applicable fire department and emergency responder requirements.
- Gate design and placement shall not impede emergency response times or create unsafe queueing conditions.
- Knox boxes, override systems, emergency access controls, or other approved emergency access systems may be required.
- Pedestrian access and sidewalk continuity shall be maintained regardless of gated entry conditions.

Pedestrian & Trail Coordination

- Emergency access systems shall be coordinated with sidewalks, trails, parks, and open space systems.
- Emergency access crossings along trails and pedestrian corridors shall be designed to maintain public safety.
- Bollards, gates, or barriers utilized to restrict unauthorized vehicular access shall accommodate emergency responders where required.

Emergency Access During Storm Events

- Site design shall support emergency access during severe weather and flood events to the maximum extent practical.
- Emergency access routes shall be coordinated with:
  - Stormwater systems, utility infrastructure, site grading and flood protection measures
- Development shall not create conditions that impair emergency access due to flooding or drainage conflicts.
- Lift stations, emergency generators, and critical infrastructure shall maintain emergency service accessibility.

Fire Apparatus Design Vehicle

Emergency access and roadway systems shall be designed to accommodate the operational requirements of the applicable responding fire apparatus utilized by Charlotte County Fire & EMS, Lee County Fire & EMS, and/or the applicable Authority Having Jurisdiction (AHJ).

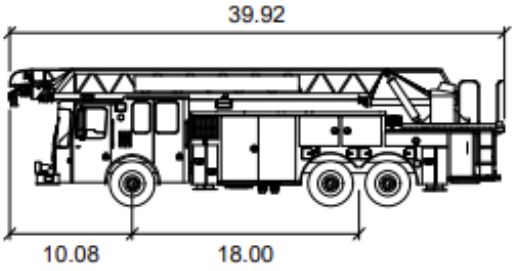

Smeal Aerial RM 100ft

	feet
Width	: 8.33
Track	: 7.92
Lock to Lock Time	: 6.0
Steering Angle	: 45.0

Open Space Planning Strategies

Open space is a fundamental component of residential development at Babcock Ranch and shall be intentionally integrated into the planning and design of every neighborhood. Open space is not considered residual land, but rather a primary organizing element that supports community identity, walkability, environmental stewardship, and quality of life.

Residential open space shall function as an interconnected system of greens, parks, preserves, and landscape corridors that enhance both the built and natural environment. These spaces shall be designed to be accessible, usable, and visually integrated into the neighborhood fabric.

Framework

Open space shall be planned as a connected network that links residential areas to natural systems, trails, and community amenities.

Required:

- Open space shall be integrated into the overall neighborhood structure and not treated as leftover or unusable land
- Open spaces shall be connected by sidewalks, trails, or landscape corridors
- Open space shall be visible and accessible from adjacent streets and homes

Intent: Establish a continuous and legible open space system that reinforces connectivity and neighborhood identity.

Open Space Types

Residential development shall incorporate a variety of open space types to support a range of uses and experiences.

Typical Open Space Types Include:

- *Neighborhood greens and commons*
- *Pocket parks*
- *Linear parks and trail corridors*
- *Natural preserves and conservation areas*
- *Stormwater lakes and littoral zones*

Each open space type shall be purposeful, appropriately scaled, and integrated into the overall site design.

Relationship to Streets and Homes

Open space shall be framed and activated by adjacent residential development.

Required:

- *Homes shall front onto open space where feasible*
- *Streets shall define and provide access to open space areas*
- *Rear or side lot conditions adjacent to open space shall be avoided or appropriately screened*

.

Intent: Create well-defined, visually engaging spaces that contribute to the public realm.

Open Space Planning Strategies (cont.)

Usability and Design Quality

Open space shall be designed as functional and usable areas that support both active and passive recreation.

Required:

- Open spaces shall be accessible and appropriately scaled for intended use
- Pedestrian access shall be provided from adjacent streets or paths
- Open spaces shall include basic amenities such as seating and shade where appropriate

Strongly Encouraged:

- Incorporation of play areas, fitness elements, or informal gathering spaces
- Use of focal elements such as landscape features, art, or shade structures

Intent: Ensure open space is actively used and contributes to everyday neighborhood life.

Natural Systems and Preservation

Open space planning shall prioritize the preservation and integration of natural systems.

Required:

- Wetlands, preserves, and native habitats shall be incorporated into the open space network
- Development shall respect existing topography, drainage patterns, and environmental features
- Use of native and adaptive plant species
- Preservation of views and connections to natural areas

Intent: Strengthen ecological function while reinforcing the connection between residents and the natural environment.

Stormwater Integration

Stormwater systems shall be designed as integral components of the open space framework.

Required:

- Stormwater facilities shall be coordinated with open space planning and neighborhood layout
- Pond edges, littoral zones, and adjacent areas shall be designed for both function and appearance

Strongly Encouraged:

- Integration of Low-Impact Development (LID) strategies such as bioswales and rain gardens
- Incorporation of trails, overlooks, or seating adjacent to stormwater features

Intent: Combine infrastructure and amenity to enhance both performance and user experience.

Open Space Planning Strategies (cont.)

Connectivity and Access

Open space shall support pedestrian and bicycle connectivity throughout residential neighborhoods.

Required:

- Direct connections shall be provided between open spaces and:
  - Residential areas
  - Sidewalks and trails
  - Community amenities

Strongly Encouraged:

- Multiple access points to open spaces
- Integration with the Babcock Ranch trail system

Intent: Promote walkability and seamless movement throughout the community.

Shade and Comfort

Open space shall be designed to provide comfort in Southwest Florida's climate.

Required / Strongly Encouraged:

- Shade shall be provided through canopy trees or structures
- Seating areas shall be located in shaded or partially shaded conditions
- Landscape design shall support microclimate comfort

Intent: Ensure open spaces are usable throughout the year.

Maintenance and Long-Term Performance

Open spaces shall be designed for durability and long-term performance.

Required:

- Landscape and irrigation systems shall be appropriate for long-term maintenance
- Materials shall be durable and climate-appropriate
- Use of native and low-maintenance plant materials
- Design strategies that reduce long-term operational costs

Intent: Maintain quality and functionality over time with minimal maintenance burden.

Open space at Babcock Ranch is a defining feature of residential development, providing both environmental and social value. By integrating open space into the structure of each neighborhood, development contributes to a connected, walkable, and resilient community that enhances the daily experience of residents.

Open Space Planning Example



Amenity Site Principles

Amenities within residential neighborhoods at Babcock Ranch are intended to serve the daily needs of residents and shall be designed as private or semi-private spaces integrated within the open space framework. These amenities support recreation, wellness, and social interaction while enhancing neighborhood identity and livability.

Neighborhood amenities shall be appropriately scaled to the size, density, and character of the development and shall complement—rather than duplicate—larger community-wide amenities.

Amenity buildings are classified as "Commercial". Refer to Chapter One (Commercial Guidelines), Chapter Two (Hardscape Guidelines) and Chapter Four (Landscape Guidelines) for approved materials and design standard requirements.

Relationship to Open Space

Neighborhood amenities shall be integrated within and reinforce the open space system.

Required:

- Amenities shall be located within or directly adjacent to open space areas
- Amenities shall be accessible to neighborhood residents via sidewalks or trails
- Amenities shall not be isolated or disconnected from the neighborhood

Intent: Ensure amenities activate open space and contribute to a cohesive neighborhood structure.

Private Neighborhood Amenities

Amenities provided within residential neighborhoods are not intended to function as regional or community-wide destinations.

Required:

- Amenities shall be designed for use by neighborhood residents only
- Access may be controlled or limited as appropriate to the development
- Scale and intensity shall be compatible with adjacent homes

Not Permitted:

- Over-scaled or destination-style amenities intended to draw non-resident traffic
- Uses that create excessive noise, traffic, or operational impacts on surrounding homes

Amenity Site Principles (cont.)

Amenity Types

Neighborhood amenities shall be simple, functional, and appropriate to residential use.

Typical Amenities May Include:

- Seating areas and small gathering spaces
- Shade structures or pavilions
- Pocket play areas
- Open lawn areas for informal recreation
- Small dog parks or pet areas
- Walking paths or fitness nodes

Optional (Where Appropriate):

- Small-scale community facilities (limited to neighborhood use)

Distribution and Accessibility

Amenities shall be conveniently located and accessible within the neighborhood.

Required:

- Amenities shall be within a reasonable walking distance of homes
- Safe and direct pedestrian access shall be provided
- Amenities shall be located along open space corridors or central greens

Strongly Encouraged:

- Multiple smaller amenities distributed throughout the neighborhood rather than a single centralized feature

Intent: Promote daily use and accessibility for all residents.

Usability and Design Quality

Amenities shall be designed for comfort, functionality, and everyday use.

Required:

- Amenities shall include shade, seating, and pedestrian access where applicable
- Spaces shall be clearly defined and appropriately scaled
- Amenities shall be visible and easily identifiable

Strongly Encouraged:

- Flexible spaces that accommodate multiple uses
- Simple, durable design solutions

Shade and Climate Responsiveness

Amenities shall be designed for year-round usability in Southwest Florida.

Required / Strongly Encouraged:

- Shade through canopy trees or structures
- Seating located in shaded or partially shaded areas
- Materials that minimize heat gain

Intent: Ensure comfort and usability throughout the day and across seasons.

Amenity Site Principles (cont.)

Integration with Neighborhood Character

Amenities shall reinforce the architectural and landscape character of the neighborhood.

Required:

- Amenity structures shall be consistent with the Babcock Ranch architectural style
- Materials, colors, and forms shall align with surrounding homes

Strongly Encouraged:

- Integration with native and adaptive landscaping
- Design elements that contribute to neighborhood identity

Safety and Visibility

Amenities shall be designed to promote safety through visibility and passive surveillance.

Required:

- Amenities shall be visible from adjacent homes or streets where feasible
- Clear lines of sight shall be maintained
- Lighting shall be provided where appropriate

Maintenance and Durability

Amenities shall be designed for long-term performance and ease of maintenance.

Required:

- Durable, weather-resistant materials
- Equipment and site elements designed for longevity

Encouraged:

- Low-maintenance landscape design
- Native plant materials

Submittal Requirements

Amenity plans shall be included with residential development submittals and shall include:

- Amenity location plan integrated with open space
- Description of amenity types and intended use
- Pedestrian access and connectivity plan
- Landscape and shade strategy
- Materials and equipment specifications

Private neighborhood amenities at Babcock Ranch are designed to support daily life, foster community interaction, and enhance the residential environment. By integrating amenities within the open space framework and scaling them appropriately, neighborhoods achieve a balanced, functional, and cohesive design.

Amenity Site Principles Examples







Amenity Site Principles Examples (cont.)







Amenity Site Principles Examples (cont.)

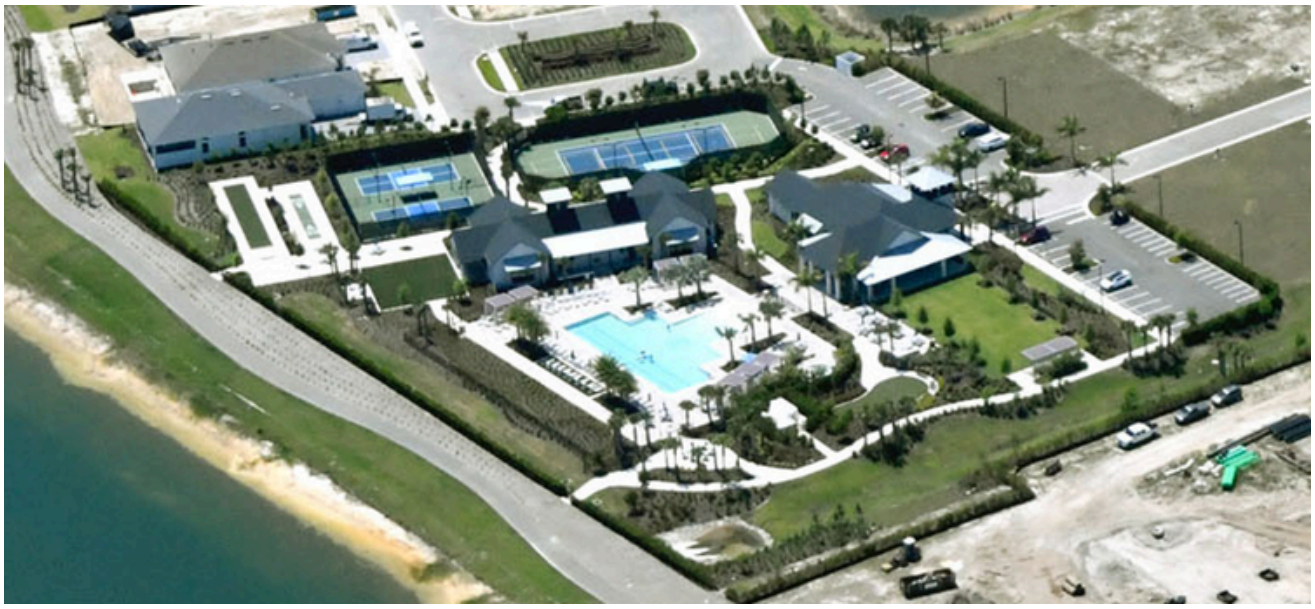



Technology Requirements

Residential technology systems at Babcock Ranch shall support a high-performance, connected, and future-ready living environment. Homes shall be designed and constructed to integrate reliable communications infrastructure, energy monitoring, smart home capability, and resilient systems that enhance occupant comfort, efficiency, and long-term adaptability.

Technology installations shall be coordinated with architectural design, shall not detract from the visual character of the home, and shall be implemented in a manner that supports both current and future technological needs.

General Requirements

- All homes shall be designed to support high-speed broadband connectivity.
- Technology systems shall be integrated into the design of the home and not appear as afterthoughts.
- All exterior-mounted technology devices shall be screened or concealed from public view where feasible.
- Equipment locations shall be coordinated with architectural, landscape, and utility layouts.
- All installations shall comply with applicable building codes, service provider requirements, and community standards.

Structured Wiring & Connectivity

- All homes shall include a centralized structured wiring panel or smart home hub location.
- Homes shall be pre-wired to support:
  - High-speed internet (fiber or equivalent)
  - Wireless access points (Wi-Fi coverage throughout the home)
  - Television/media distribution (where applicable)
  - Data and communication cabling shall be installed in a structured, organized manner to support future expansion.
- Conduit pathways shall be provided to allow future upgrades without wall demolition.

Smart Home Readiness

Homes shall be designed to support smart home systems, including:

- Smart thermostats
- Smart lighting controls
- Smart door locks and access systems
- Integrated security and monitoring systems
- Smart irrigation controllers

All systems shall be compatible with widely adopted platforms and designed for ease of homeowner use.

Technology Requirements (cont.)

Energy Monitoring & Management

- Homes shall be equipped with the capability to monitor energy usage at the whole-home level.
- Smart thermostats and programmable controls shall be required.
- Electrical panels shall be designed to accommodate future energy technologies, including:
- Solar photovoltaic (PV) systems
- Battery storage systems
- Where feasible, homes should incorporate demand management or load control capability.

Electric Vehicle Readiness

- All homes shall be designed to accommodate future electric vehicle charging.
- At a minimum, one of the following shall be provided:
- Dedicated 240V circuit in the garage, or
- Conduit pathway and panel capacity for future EV charger installation
- EV infrastructure shall be located within garages or screened areas.

Security and Life Safety Systems

- Homes shall be pre-wired or equipped to support:
- Security systems
- Video doorbells or entry monitoring
- Exterior surveillance (optional, homeowner-installed)
- Visible security devices shall be discreet and compatible with the home's architectural character.
- Life safety systems (smoke detectors, CO detectors) shall comply with code and be interconnected where required.

Color Palette

The Babcock Ranch color palette is derived from the natural environment—sky, water, vegetation, and earth tones—and is intended to create a cohesive, timeless, and regionally appropriate architectural character. The controlled use of color ensures visual harmony across neighborhoods while allowing for individual expression within a defined framework.

All residential structures shall utilize approved colors in a coordinated manner that reinforces architectural style, streetscape continuity, and neighborhood identity.

Color System Framework

Body

- Primary exterior wall surfaces (stucco, siding, board and batten)
- May include corner boards where applicable

Trim

Secondary elements including:

- Columns
- Fascia and soffits
- Window and door frames
- Railings and architectural trim

Accent

Limited application elements including:

- Front doors
- Shutters
- Window sashes
- Small architectural features

General Standards

- All exterior colors shall be selected from the approved Babcock Ranch palette.
- Colors shall be appropriate to the architectural style of the home.
- Muted, natural tones are required; overly bright or saturated colors are prohibited.
- Dark colors on large stucco surfaces may be restricted and reviewed on a case-by-case basis.
- All color combinations shall be coordinated across body, trim, and accent elements.

Application Requirements

- Trim elements shall be consistently applied and shall not vary across elevations.
- All exposed edges of trim shall be painted to match the trim color.
- Water tables, drip edges, and similar elements shall match the trim color.
- Front door sidelites shall match the trim color, not the door color.

Color Palette (cont.)

Color Distribution and Repetition

- To maintain neighborhood diversity and avoid repetition:
- Identical homes (same plan and elevation) shall not use the same body color on the same block.
- Similar homes may repeat body colors only when separated by a minimum of three homes.
- The same body color shall not be used directly across the street without approval.
- Builders shall coordinate color selections across lots to ensure appropriate distribution.

Alternate Palette

An expanded palette of complementary colors may be approved for use where consistent with the overall character of Babcock Ranch. These colors shall be reviewed and approved by the FRC prior to use.
The alternate palette includes additional coastal blues, greens, neutrals, and earth tones

Prohibited

- Unapproved colors outside the palette
- High-contrast or incompatible color combinations
- Repetitive color use creating visual monotony
- Inconsistent application of trim and accent colors
- Bright, neon, or overly saturated finishes

Authorized Color Palette



Alternate Color Palette Selections



Babcock Ranch Residential Association (BRRA)

The Babcock Ranch Residential Association Homeowner Guidelines establish the ongoing standards for homeowner improvements, exterior modifications, maintenance, and residential community operations following initial construction and occupancy. These standards are intended to preserve neighborhood character, protect property values, and ensure that individual homeowner improvements remain compatible with the overall vision and quality of Babcock Ranch.

The Residential Development Guidelines establish the design framework for neighborhood planning, architecture, sustainability, infrastructure, and initial construction. The Residential Association Homeowner Guidelines provide the continuing standards that apply after homes are completed and occupied.

BRRA RESOURCES:
Architectural Review

BABCOCK RANCH

LANDSCAPE GUIDELINES

Introduction

Welcome to Babcock Ranch, The Standard for Thoughtful, Environmentally Responsible and Sustainable Development! A Development Designed to Enrich the Human Experience, Where People and Nature are Inseparable.

Babcock Ranch is envisioned as a pioneering community—America's first solar-powered town—where natural Florida ecosystems, thoughtful design, and resilient development come together to create a place that is environmentally responsible, healthy, and enduring. The Landscape Design Guidelines establish a unified framework to ensure that every homesite, public space, streetscape, and civic area contributes to a cohesive community identity rooted in sustainability and stewardship.

Landscape design at Babcock Ranch is more than beautification; it is a core component of the town's ecological infrastructure. These guidelines align the built environment with the surrounding natural systems, reinforcing the community's commitment to native habitat preservation, water conservation, and climate resilience. Planting selections, irrigation practices, and site planning all support long-term environmental health while enhancing comfort, walkability, and neighborhood character.

The standards outlined in this document draw from Babcock Ranch's foundational design principles, including the Landscape Principles & Native Plant Guide and the Design and Specification Manual (DSM), ensuring consistency across all development types. They provide homeowners, builders, architects, and landscape professionals with clear expectations for creating landscapes that are:

- Native and Florida-Friendly, prioritizing species that support local wildlife and thrive in Southwest Florida's climate
- Water-Efficient, using smart irrigation design, reduced turf areas, and drought-tolerant planting strategies
- Resilient, incorporating wind-tolerant and storm-adapted species suitable for a subtropical environment
- Cohesive and Contextual, reinforcing the visual character of Babcock Ranch neighborhoods while preserving individual creativity
- Low Maintenance and Sustainable, reducing dependence on chemical inputs and promoting long-term plant health

By following these guidelines, residents and builders help uphold the vision of Babcock Ranch as a model for responsible development, where the landscape is integral to both community identity and environmental integrity. Together, we cultivate a place that celebrates Florida's natural beauty, fosters meaningful outdoor living, and protects the land for generations to come.

All landscape designs must be submitted to the BRCISD during all site planning for review and receive approval from the FRC. Any and all mulch types in verge and median areas is strictly prohibited throughout Babcock Ranch

Legal Notice & Special Exception

Guidelines set forth in this document, and the interpretations of same may be enforced by the Independent Special District, Founders Review Committee, Florida Green Build Coalition Certified Professionals and/or their designated representatives.

Babcock Ranch bears no liability for, and expressly disclaims any responsibility arising from, the interpretation, application, or reliance upon these design guidelines. Users are solely responsible for independently determining and verifying that their designs comply with all applicable Federal, State, and local laws, regulations and codes, including but not limited to zoning ordinances, building codes, and accessibility requirements.

Special Exception: The Founders Review Committee, reserves the authority to grant all waivers or special exceptions. The intent of these guidelines is to provide direction while encouraging ongoing coordination with the FRC and FGBC professionals throughout the architectural design process to ensure the highest-quality outcomes for Babcock Ranch.

Glossary

Babcock Overlay Zoning District (BOZD)
Babcock Ranch Community (BRC)
Babcock Ranch Community Independent Special District (BRCISD)
Design Specifications Manual (DSM)
Development of Regional Impacts (DRI)
Florida Green Building Coalition (FGBC)
Founders Review Committee (FRC)
Independent Special District (ISD)
Master Planned Development (MPD)

References

The documents listed below, along with any additional applicable Federal, State, Local, or ISD publications not specifically identified here, take legal precedence over all design guideline content and should be reviewed to inform planning efforts.

- Babcock Ranch Community Master Development of Regional Impact (DRI)_Charlotte County
- Master Development Order (MDO)_Charlotte County
- Babcock Overlay Zoning District (BOZD) documents_Charlotte County
- Babcock Ranch Master Plan Development (MPD)_Lee County
- Charlotte County Zoning and Building Code
- Lee County Zoning and Building Code
- Florida Green Building Coalition (FGBC) Commercial Certification
- Sierra Club Florida Chapter
- Sierra Club Settlement Agreement
- Babcock Ranch Community Independent Special District (ISD) Design Specification Manual (DSM)
- South Florida Water Management District Regulations
- Florida Department of Environmental Protection Regulation
- Florida Invasive Species Council
- Florida Wildlife Corridor Foundation
- Design Guidelines for Corridor Compatible Communities

Vision

Babcock Ranch is built upon a bold and forward-thinking vision: to create a sustainable, resilient, and connected community that harmonizes human habitation with Florida's natural landscape. Every landscape decision—from individual residential lots to community parks and public spaces—supports this vision by promoting ecological health, long-term resource efficiency, and environmental stewardship.

The Landscape Guidelines translate this vision into clear principles that guide site planning, plant selection, installation, and maintenance. These principles not only strengthen the community's identity but also uphold Babcock Ranch's role as a national model for sustainable development.

A Community Rooted in Nature

The landscape is an extension of the surrounding ecosystems, reflecting native plant communities, natural hydrology, and the subtropical climate of Southwest Florida. Views to lakes, conservation areas, and greenways are preserved to maintain a seamless relationship between built and natural environments.

A Model for Responsible Growth

Babcock Ranch demonstrates how thriving neighborhoods can coexist with restored and preserved habitats. Landscape choices emphasize ecological integrity, reduce environmental impact, and support the region's biodiversity.

A Walkable, Healthy, Outdoor-Oriented Town

Shaded, comfortable streetscapes, accessible parks, and connected trail systems encourage outdoor living, wellness, and community gathering. Landscaping enhances the walkable urban framework that defines Babcock Ranch.

Guiding Principles

Landscape design at Babcock Ranch is not ornamental—it is performative infrastructure. Landscapes are expected to function as ecological systems, stormwater assets, microclimate regulators, and community-building elements that reinforce the identity of America's first solar-powered town.

Ecological Stewardship

Landscape design shall preserve, restore, and enhance the native ecological character of Babcock Ranch, consistent with the DSM's requirement for native-dominant planting palettes. A minimum of 75% native trees and shrubs is required within privately owned areas, and 90% native plant material is required in public areas, with 100% native plantings in primary greenways. Plant selection shall prioritize species listed in the Babcock Ranch Native Plant Guide and support wildlife movement, pollinator health, and protected natural view corridors. *Invasive exotic species are strictly prohibited.*

Water Conservation

Landscape designs must minimize water demand by limiting high-input turfgrass to functional, well-defined areas, not exceeding typical lot standards. Plant materials shall emphasize Florida-Friendly, drought-tolerant species capable of thriving under reclaimed-water irrigation. All required landscaping must be served by automatic IQ water irrigation systems, designed to avoid overspray, runoff, and application to impervious surfaces. Micro-irrigation is required in landscape beds, and irrigation zones must be separated by plant water needs. Moisture-sensing devices and efficient scheduling practices are mandatory.

Climate Resilience

Landscapes must be constructed to withstand Southwest Florida's climatic conditions, including strong winds, seasonal rainfall, and long dry periods. Planting should prioritize storm-adapted, wind-resistant, and pest-resistant native species. Grading and drainage must incorporate naturalistic strategies—such as rain gardens, bioswales, and vegetated conveyances—to support infiltration and protect downstream water quality.

Healthy, Low-Maintenance Environments

To promote plant longevity and reduce resource inputs, plant communities shall be organized into hydrozones that reflect shared soil, sun, and moisture needs. Mulch shall be applied at 3–4 inches using approved materials. Fertilizer use is restricted to controlled-release or non-chemical foliar products outside grow-in periods, and rainy-season fertilization is prohibited except for specific establishment needs. Integrated Plant Health Care (IPM) is encouraged to reduce dependency on pesticides and chemical treatments.

Community Identity & Design Cohesion

All landscape shall reinforce Babcock Ranch's distinct community character by maintaining consistent street tree canopies, buffering, and pedestrian-scaled planting patterns. Landscaping in all ROWs is subject to review to confirm species compliance and visibility requirements. Sightlines—particularly along lake edges—must be preserved, with planting depth and shrub height managed to protect designated view corridors. Landscapes should support the community's connectivity through inviting, human-scaled design.

Sustainability & Performance Requirements

Landscape systems at Babcock Ranch shall be designed and constructed as high-performance environmental infrastructure. All projects must demonstrate measurable outcomes in water conservation, ecological function, resource efficiency, and long-term resiliency. The following are minimum performance thresholds to ensure support of the communities sustainability goals and FGBC Certification Standards.

Plant Resilience

Minimum native plant requirements:

- 75% native on privately owned residential lots
- 90% native in public/commercial landscapes
- 100% native in greenways, cological corridors, preserve edge-buffers and littoral zones

Littoral vegetation:

- All littoral shelf plantings must consist of water-tolerant native species appropriate for fluctuating lake levels

Prohibited species:

- Invasive species are strictly prohibited within all planting areas

Turfgrass

Turfgrass is limited to reduce water use and environmental impact:

- Maximum 15% of total vegetative lot area
- Turfgrass shall be limited to functional areas and shall not exceed 15% of the total landscaped area of the lot. In addition, turfgrass within the front yard shall not exceed 15% of the landscaped front-yard area. Both limitations shall apply unless an alternative is approved by the FRC based on site-specific conditions.

Irrigation

- Irrigation lines and tree/shrub stems must remain 18 inches minimum from building foundations
- Irrigation systems must be designed to prevent overspray onto roads, sidewalks, driveways, structures and natural preserves
- Micro-irrigation or drip systems shall be incorporated into planting beds, as applicable
- Temporary irrigation lines are to be installed if/when a berm or littoral zone is planted during the dry season for plant establishment followed by their removal when wet season arrives.
- Irrigation zones shall be organized by hydrozones - matching sun and water needs.

Stormwater Performance & Littoral Zone Requirements

- Littoral zones must include 15-foot minimum native planting shelves to stabilize banks and improve water quality and must be included within the civil permit set.
- Lakefront sightlines must be preserved:
  - Shrubs along lake-visible rear property lines may not exceed 30 inches in height
- Rain gardens and bioswales are recommended within lots and open spaces to improve infiltration

Sustainability & Performance Requirements (cont.)

Tree & Plant Installation Requirements

- A minimum of one canopy tree is required in the front yard of single-family lots
- Minimum canopy tree size: 3" caliper, 14–17 ft height depending on placement
- Minimum accent tree/palm requirements: two per home, sized 3" caliper or 14-17 ft height
- Plant material must be grouped by similar sun and water requirements to support long-term performance

Mulch & Soil Requirements

- *Approved mulches include:*
  - ***MULCH IS STRICTLY PROHIBITED IN VERGE AREAS***
  - *Pine straw (4" minimum)*
  - *Shredded mulches such as Florimulch or Shredded Pine (3" minimum)*
  - *Florida Native, sustainably harvested mulch, or pine straw can be used for slope stabilization around the native plantings. No melaleuca or other exotics allowed.*
  - ***Cypress mulch is prohibited***
  - *Mulch may be used as groundcover for up to 15% of planting bed area when applied in continuous masses*

Visual & Safety Performance Requirements

- Sightlines - especially at roadway intersections, driveways, and lake edges—must remain unobstructed utilizing lower vegetative planting practices.
- HVAC units and tankless water heaters must be screened using landscape hedges or decorative fencing that meets height and placement requirements
- Fence heights are restricted by lot type; decorative aluminum fencing facing lakes may not exceed 48 inches to preserve views

Lake Littoral Shelf Planting Species		
Common Name	**Scientific Name**	**Notes**
Arrowhead	*Sagittaria latifolia*	
Blue Flag Iris	*Iris virginica*	
Hardstem Bulrush	*Scirpus acutus*	*Use Sparingly; between lot lines or where no homes are present (along spine roads)*
Pickerel Weed	*Pontederia cordata*	
Sand Cord Grass	*Spartina bakeri*	
Softstem Bulrush	*Scirpus validus*	*Use Sparingly; between lot lines or where no homes are present (along spine roads)*
Spikerush	*Eleocharis spp.*	
Yellow Canna	*Canna flaccida*	

Plant Design & Characteristics

The plant design framework at Babcock Ranch is inspired by the native ecosystems of Southwest Florida—pine flatwoods, wet prairies, and oak hammocks. Landscapes throughout the community must reflect this natural character, ensuring ecological cohesion across all development types while supporting long-term sustainability, resilience, and habitat health.

The intent is to create landscapes that appear natural, native, simple, and ecosystem-driven, while still meeting functional needs such as screening, shade, wayfinding, and community identity.

The following standards ensure landscape cohesion and biodiversity throughout the community.

Overall Planting Character

Landscape design shall prioritize native vegetation as a foundational element of community identity and environmental performance.

- Residential (Private Lots): Minimum 75% native trees and shrubs
- Commercial & Public Spaces: Minimum 90% native trees and shrubs
- Greenways & Ecological Corridors: 100% native vegetation
- ***Strictly Prohibited:*** All category I and II plants listed on the FISC list of invasive plant species

Natural Growth Habitat & Plant Quality

Plant material shall be selected, installed, and maintained to promote natural form, structural integrity, and long-term viability.

- Plants must be selected for durability, climate resilience, and compatibility with Southwest Florida conditions.
- Growers and suppliers must provide material that meets or exceeds Florida Grades & Standards.
- Over-shearing, excessive clipping, or forced formal shapes are *discouraged* unless required for visibility and safety.

Plant Grouping & Arrangement

Planting design shall emphasize ecological function, spatial clarity, and visual cohesion through thoughtful composition and arrangement.

- Plants shall be grouped using hydrozoning principles, organizing species with similar water and sunlight requirements
- Plantings shall be installed in masses and naturalistic drifts, avoiding rigid or overly geometric layouts
- Designs shall incorporate layered vegetation structure, including:
  - Canopy
  - Understory
  - Shrubs
  - Grasses and groundcovers
- Spacing shall account for mature plant size, avoiding overcrowding and reducing long-term maintenance needs

Plant Design & Characteristics (cont.)

Integration With Stormwater & Hydrology

Landscape design shall function as an integrated component of the site's stormwater management system.

- Littoral Shelves:Minimum 15-foot planting zone required (DSM Vol. 1, p. 13)
- Must utilize 100% native, water-tolerant species
- Designed to accommodate fluctuating water levels

- Plant material shall:
  - Support bank stabilization and erosion control
  - Enhance water quality through filtration and uptake
  - Avoid conflicts with drainage infrastructure and easements
  - Bioswales and Rain Gardens:Shall incorporate native species tolerant of both drought and inundation
  - Designed to function as both infrastructure and landscape amenity

Visual & Functional Performance

Planting design shall reinforce safety, usability, and community character across all development types.

- Maintain clear sightlines at:
  - Intersections
  - Driveways
  - Pedestrian crossings
  - Waterfront edges
- Landscapes shall:
  - Support walkability and pedestrian comfort, particularly along streetscapes and shared-use paths
  - Provide shade and microclimate moderation
  - Reinforce neighborhood identity and spatial definition
- Utilities and infrastructure elements, including:
  - Meters
  - Mechanical equipment
  - Service areas
- Shall be screened with appropriately scaled plant material integrated into the overall design

Plant Typologies

Planting typologies at Babcock Ranch reflect the natural ecosystems of Southwest Florida and serve as the foundation for creating cohesive, resilient, and ecologically functional landscapes across the community. These typologies guide how plants are arranged, layered, and massed so all development—from single-family neighborhoods to commercial centers—shares a unified native character.

Each typology supports habitat creation, water conservation, and long-term landscape performance while expressing the community's design identity.

Pine Groves

Inspired by the native pine flatwoods that define the region's ecology, pine groves create vertical texture, wildlife habitat, and visual continuity along perimeters, preserves, and streetscapes. Pine groves are ideally planted to create perimeter buffers, preserve transition, large open spaces and naturalized corridors.

Appropriate Applications:

- Perimeter buffers
- Preserve transitions
- Large open spaces
- Naturalized corridors

Key Requirements:

- Primary species: Pinus elliottii var. densa (Slash Pine)
- Install a diverse mix of sizes to simulate natural regeneration:
  - 10% — #3 container (2–3.5 ft height) minimum
  - 40% — #7 container (4 ft height) minimum
  - 30% — #15 container (6 ft height) minimum
  - 20% — #25 container (8 ft height) minimum
- Arrange in informal groupings, avoiding linear spacing
- Pine straw mulch permitted only within pine grove areas

Oak Groves (Live, Ranch-Style, Heritage)

Oak groves establish the primary canopy framework, creating shaded pedestrian environments and reinforcing the character of traditional Southern landscapes.

Appropriate Applications:

- Streetscapes and pedestrian corridors
- Parks and civic spaces
- Entry features and focal areas

Key Requirements:

- Primary species: Quercus virginiana (Live Oak)
- Spacing and caliper vary by application (streetscape, park, entry)
- Arrange to create continuous canopy or clustered grove conditions
- Maintain minimum 10-foot offset from hardscape
- Use shredded hardwood mulch (pine straw prohibited)

Plant Typologies (cont.)

Sabal Palm Hammocks

Sabal palm hammocks replicate native palm assemblages and introduce vertical rhythm and identity, particularly in open and waterfront settings.

Appropriate Applications:

- Lakefronts and shoreline edges
- Entry features and medians
- Large parks and open spaces

Key Requirements:

- Species: Sabal palmetto (Cabbage Palm)
- Install in naturalistic clusters, not rows
- Incorporate varied trunk heights
- Not permitted on berms adjacent to preserves due to wildfire fuel load concerns
- Maintain minimal, native-compatible understory

Buttonwood Groves & Naturalized Screening

Buttonwood groves provide layered screening and ecological transition zones, blending developed areas into adjacent preserves and open spaces.

Appropriate Applications:

- Perimeter boundaries
- Amenity edges
- Transitions to conservation areas and woodland edges

Key Requirements:

- Primary species: Conocarpus erectus (Green or Silver Buttonwood)
- Supplement with native shrubs such as Wax Myrtle
- Install as naturalized clusters, not clipped or formal hedges
- Emphasize layering of shrubs and small trees for depth and habitat value

Grasses & Groundcover Drifts

This typology establishes a low-maintenance, drought-tolerant ground plane, reinforcing native character while supporting ecological function.

Appropriate Applications:

- Open spaces and corridors
- Streetscape edges
- Stormwater features

Key Requirements:

- Drifts shall include approximately 20 plants per grouping
- Maximum drift length: 100 linear feet
- Install in flowing, organic patterns, avoiding rigid repetition
- Approved species include:
    - Pink Muhly (Muhlenbergia capillaris)
    - Sand Cordgrass (Spartina bakeri)
    - Fakahatchee Grass (Tripsacum dactyloides)
    - Golden Creeper (Ernodea littoralis)

Plant Typologies (cont.)

Verge & Median

Verge and median plantings establish a resilient, naturalistic streetscape that reduces irrigation demand while reinforcing regional ecology.

Appropriate Applications:

- Roadway medians
- Streetscape verges
- Rights-of-way

Key Requirements:

- ***ALL types of mulch and pine straw are prohibited for use in all residential verges***
- Floratam Sod is permissable
- Minimum 80% native plant material, with recommended composition:
  - 50% grasses
  - 30% shrubs
  - 20% groundcovers
- Trees with large root systems require minimum 3-foot setback from sidewalks and root protection measures
- Planting design must maintain clear sightlines for safety

Perimeter & Buffer

Perimeter and buffer plantings provide screening, transition, and ecological integration, ensuring a seamless interface between development and natural systems.

Appropriate Applications:

- Community edges
- Property boundaries
- Transitions to preserves and open space

Key Requirements:

- Utilize grove-based compositions (pine, oak, or buttonwood)
- Sod is not permitted within buffer areas
- Buffers behind multi-story buildings shall incorporate:
  - Taller canopy elements (pines and large shrubs)
- Berms shall:
  - Appear natural in form
  - Not exceed a 4:1 slope

Pine Groves

A pine grove consists of grouped plantings of *Pinus elliottii var. densa* (South Florida Slash Pine) arranged in naturalized clusters of varying heights and diameters. This typology replicates the layered structure and longleaf-like form of the region's historic pine ecosystems.

Required Plant Size Distribution

To replicate natural ecological succession, pine groves must use a mix of tree sizes at installation:

- 10% #3 container (~2-3.5' height)
- 40% #7 container (~4 ft height)
- 30% #15 container (~6 ft height)
- 20% #25 container (~8 ft height)

This distribution creates immediate vertical diversity, enhances long-term visual interest, and accelerates establishment of canopy layers.

Location & Application Requirements

Pine groves shall be used strategically to reinforce ecological continuity and provide naturalized screening across the community.

- *Perimeter & Buffer Zones*
  - Required along edges adjacent to:
    - Major roadways
    - Multi-story development
    - Conservation or preserve areas
  - Shall function as a natural screening system, eliminating the need for formal hedges or turf buffers
- *Preservation Edges*
  - Required where development interfaces with:
    - Wetlands
    - Conservation lands
    - Wildlife corridors
  - Plant sizes shall transition outward, with smaller material located closer to native vegetation to blend conditions seamlessly
- *Streetscapes*
  - *May be incorporated along major corridors to:*
    - *Visually unify developed areas with adjacent preserves*
    - *Enhance shade and wind resilience*
- *Open Space & Parkland*
  - *Used to define:*
    - *Spatial edges*
    - *Trail corridors*
    - *Naturalized park backdrops*
  - *Reduces reliance on irrigation and intensive maintenance*

Pine Groves (cont.)

Spacing & Arrangement

Pine groves shall be installed as informal, naturalized clusters, not rows or evenly spaced plantings.

- Standards:
  - Vary spacing to replicate natural regeneration patterns
  - Allow for natural competition and irregular growth over time
  - Arrange trees in loose drifts and groupings, avoiding rigid geometry
  - Uniform spacing at fixed intervals is prohibited
- Mulching
  - Pine straw mulch is permitted and encouraged within pine grove areas
  - Pine straw shall not be used in:
    - Streetscape verges
    - Medians
    - Formal landscape areas outside grove conditions

Understory Composition

The pine grove understory shall reflect native flatwoods systems and support long-term ecological function.

- Recommended Materials:
  - Saw Palmetto (Serenoa repens)
  - Wax Myrtle (Myrica cerifera)
  - Fakahatchee Grass (Tripsacum dactyloides)
  - Sand Cordgrass (Spartina bakeri)
  - Native groundcovers such as Golden Creeper (Ernodea littoralis)
- Understory planting shall be layered, informal, and drought-tolerant, minimizing the need for irrigation and ongoing maintenance.

Function & Performance Expectations

- Screening & Privacy
  - Provides layered, naturalized screening for perimeters and transitions
  - Eliminates reliance on continuous hedges
- Climate Resilience
  - Pinus elliottii var. densa is highly wind-resistant and climate-adapted
  - Groves reduce wind exposure, provide shade, and mitigate heat island effects
- Habitat & Ecology
  - Supports native wildlife including birds, pollinators, and small mammals
  - Enhances biodiversity and contributes to long-term soil health

Maintenance Requirements

- Maintain natural growth habit; shearing or formal shaping is prohibited
- Remove invasive or nuisance species as needed
- Retain pine straw mulch within grove areas
- Irrigation shall be limited or eliminated after establishment
- Bubblers are prohibited

Pine Groves (cont.)





Oak Groves

Oak Groves at Babcock Ranch establish the primary canopy framework of the community, shaping shaded environments, defining space, and reinforcing a timeless Florida landscape identity. This typology is expressed through three distinct but complementary applications—Live Oak Groves, Heritage Oaks, and Ranch-Style Oaks—each contributing to a layered, cohesive landscape system rooted in native ecology.

Together, these oak typologies create a balance of density and openness, supporting walkability, environmental performance, and long-term community character.

Defining Typology

All oak typologies utilize Quercus virginiana (Southern Live Oak) and, where appropriate, Quercus virginiana ‘Boardwalk’ for constrained conditions.

Live Oak Groves

Grouped plantings that create continuous or clustered canopy environments. These are used to define streets, parks, and civic spaces with strong shade coverage and spatial enclosure.

Heritage Oaks

Preserved or strategically placed large-caliper Live Oaks that serve as landmark trees. These represent permanence, maturity, and historical continuity within the landscape.

Ranch-Style Oaks

Widely spaced, low-branching Live Oaks placed in open settings to emphasize individual form and canopy spread. This typology reflects Florida’s ranchland character and promotes expansive, uncluttered landscapes.

Required Characteristics

- Form
  - All oak trees shall maintain a single, straight central leader at installation
  - Ranch-style oaks may develop lower branching structure over time to emphasize natural form
  - Variation in caliper is encouraged to support layering and natural appearance
- Caliper & Height
  - Minimum 3-inch caliper required
  - Larger calipers required for:
    - Heritage Oaks (where feasible or relocated specimens)
    - Entry features, parks, and civic spaces

Oak Groves (cont.)

Placement & Application

Oak typologies shall be applied strategically based on spatial intent and program.

- Live Oak Groves
  - Streetscapes and pedestrian corridors
  - Parks, greens, and plazas
  - Entry corridors and arrival sequences
  - Areas requiring continuous canopy and shade
- Heritage Oaks
  - Preserved in place wherever possible
  - Integrated into:
    - Parks and open spaces
    - Entry features
    - Prominent civic locations
  - Site design shall prioritize protection and visibility of these trees
- Ranch-Style Oaks
  - Large open spaces and parkland
  - Community edges and transitions
  - Areas emphasizing long views and open character
  - Used as specimen or loosely grouped trees, not groves

Spacing & Arrangement

Oak planting shall reflect natural Florida woodland and pasture conditions, avoiding rigid or repetitive layouts unless intentionally designed.

- Standards:
  - Live Oak Groves: Variable spacing to create layered canopy conditions
    - May be tighter to achieve canopy continuity
  - Heritage Oaks: Positioned as focal elements with generous clear space around canopy
    - Avoid crowding or competing plant material
  - Ranch-Style Oaks: Wide spacing to allow full canopy development
    - Emphasize horizontal spread and individual tree form
  - Maintain minimum 5-foot offset from hardscape (10 feet preferred in open conditions) to avoid root conflict

Oak Groves (cont.)

Understory Composition

Understory planting shall be tailored to each oak typology:

- Live Oak Groves
  - Layered, shaded understory using:
    - Simpson Stopper (Myrcianthes fragrans)
    - Wax Myrtle (Myrica cerifera)
    - Cocoplum (Chrysobalanus icaco)
    - Saw Palmetto (Serenoa repens)
    - Native ferns and grasses
- Heritage Oaks
  - Minimal understory to maintain visibility and prominence
  - Use low groundcovers or natural mulch zones
- Ranch-Style Oaks
  - Open ground plane with:
    - Native grasses
    - Limited turf (where appropriate)
  - Avoid dense shrub layers

Mulching

- Shredded hardwood mulch required for all oak typologies
- Pine straw mulch is not permitted within oak planting areas

Function & Performance

- Shade & Microclimate
  - Provides significant cooling and enhances pedestrian comfort
  - Critical for walkability and outdoor usability
- Wind & Storm Resilience
  - Quercus virginiana is highly wind-resistant and structurally durable
  - Supports community-wide resiliency goals
- Habitat & Biodiversity
  - Supports birds, pollinators, and native wildlife
  - Contributes to long-term ecological health
- Community Identity
  - Establishes a consistent, recognizable canopy language
  - Reinforces a timeless, regionally authentic landscape character

Oak Groves (cont.)

Maintenance Requirements

- Pruning
  - Maintain natural form; shearing and excessive canopy lifting are prohibited
  - Provide required clearances for safety and visibility
- Watering & Establishment
  - Irrigate during establishment period only
  - Long-term irrigation shall be minimal and aligned with hydrozones
- Root Management
  - Provide adequate soil volume
  - Avoid conflicts with utilities and hardscape
  - Utilize root barriers or structural soils in constrained conditions



Sabal Palm Hammock

Sabal Palm Hammocks are a defining landscape typology at Babcock Ranch, reflecting the character of native Florida flatwoods and wetland-edge ecosystems. These plantings establish distinct vertical structure, visual identity, and regional authenticity, while reinforcing the community's connection to Southwest Florida's natural heritage.

Arranged in naturalized clusters, Sabal palms soften built environments, provide ecological value, and create iconic landscape moments at lakefronts, streetscapes, and key community entries.

Defining Typology

A Sabal Palm Hammock consists of grouped plantings of Sabal palmetto (Cabbage Palm), arranged in varied heights and densities to replicate native palm communities.

- Primary Species (Required):
  - Sabal palmetto (Cabbage Palm)
- Character Attributes:
  - Multi-height clustered groupings
  - Natural, informal arrangement (non-uniform)
  - Retention of bootjacks preferred to maintain authentic native character

Required Plant Characteristics

- *Form & Trunk Appearance*
  - *Palms shall maintain natural trunk character; uniform straightness is not required*
  - *Slight lean, curvature, and irregularity are encouraged*
  - *Trunks may be cleaned (slicked) up to 6 feet only where required for pedestrian or vehicular clearance*
- *Height Variation*
  - *Each hammock shall include a minimum of three distinct height classes*
  - *Height variation is required to:*
    - *Create a layered vertical composition*
    - *Reinforce natural clustering patterns*
    - *Enhance habitat value*
- *Quality*
  - *All palms shall meet Florida Grades and Standards (heavy-grade minimum)*
  - *Palms must be fully rooted, structurally sound, and properly established at installati*

Sabal Palm Hammock (cont.)

Placement & Application

Sabal Palm Hammocks shall be used to provide vertical structure, visual emphasis, and ecological integration across the community.

- Lakefront & Waterfront Edges
  - Primary typology for shoreline planting
  - Highlight water bodies while preserving view corridors
  - Coordinate with littoral zones for ecological continuity
- Perimeters & Buffers
  - Provide vertical accent and soft screening along roadways and between land uses
  - Used where natural transition is desired without dense hedging
- Streetscapes
  - Appropriate for:
    - Wide verges
    - Medians
    - Boulevards
  - Complement Live Oak and Pine Grove typologies with a clean vertical profile
- Parks, Plazas & Trail Corridors
  - Establish recognizable Florida landscape character
  - Serve as visual anchors at trailheads, gathering spaces, and key nodes

Spacing & Arrangement

Sabal Palm Hammocks shall reflect natural palm ecosystems, avoiding rigid or repetitive layouts.

- Standards:
  - Install in loose, organic clusters, not rows
  - Stagger heights to create a layered vertical silhouette
  - Allow spacing to vary:
    - Tighter central groupings
    - Looser outer placements
  - Formal alignment is prohibited except where specifically required for entry features or design emphasis

Mulching

- Use shredded brown hardwood mulch within all palm hammock areas
- Pine straw mulch is prohibited (reserved exclusively for Pine Grove typology)

Sabal Palm Hammock (cont.)

Understory Composition

Understory planting shall reinforce native ecosystems and enhance ecological performance.

- Recommended Species:
  - Saw Palmetto (Serenoa repens)
  - Cocoplum (Chrysobalanus icaco)
  - Wax Myrtle (Myrica cerifera)
  - Fakahatchee Grass (Tripsacum dactyloides)
  - Pink Muhly (Muhlenbergia capillaris)
  - Golden Creeper (Ernodea littoralis)
- Understory shall be informal, layered, and drought-tolerant, providing texture, movement, and habitat support.

Function & Performance

- Shade & Microclimate
  - Provides intermittent shade and vertical framing of open spaces
  - Enhances comfort without creating dense canopy conditions
- Wind & Storm Resilience
  - Sabal palmetto is highly wind-resistant and storm-adapted
  - Ideal for exposed and coastal-influenced environments
- Habitat & Ecology
  - Supports birds, insects, and small wildlife
  - Complements pine and oak systems to create multi-layered habitat networks
- Visual Identity
  - Reinforces a distinct Florida landscape character
  - Establishes recognizable features at:
    - Lake edges
    - Intersections
    - Entry corridors
    - Amenity nodes

Sabal Palm Hammock (cont.)

Maintenance Requirements

- Pruning
  - Remove dead or declining fronds only
  - “Hurricane cutting” is prohibited
  - Retain natural crown form at all times
  - Bootjacks shall be retained; selective removal permitted only for safety or clearance
- Trunk Maintenance
  - Trunks may be cleaned to a maximum of 6 feet where required for clearance
  - Full debooting or over-cleaning resulting in a smooth trunk appearance is prohibited
- Irrigation
  - Provide irrigation during establishment period only
  - Long-term irrigation shall be minimal or eliminated once established
- Health & Monitoring
  - Monitor for nutrient deficiencies (particularly magnesium and potassium)
  - Avoid excessive mulch buildup at trunk base to prevent rot



Buttonwood Groves & Natural Screening

Buttonwood Groves and Naturalized Screening areas establish informal, native, and ecologically integrated transitions between developed areas and the surrounding landscape. Unlike conventional hedge lines, this typology relies on layered plant masses, height variation, and natural composition to soften edges, provide privacy, and visually blend development into the broader environmental context.

This approach reinforces Babcock Ranch's commitment to native planting, long-term resiliency, and seamless integration with conservation lands, open spaces, and preserved systems.

Defining Typology

Buttonwood Groves consist of naturalized clusters of Conocarpus erectus (Green Buttonwood) and/or Conocarpus erectus 'Sericeus' (Silver Buttonwood), combined with compatible native shrubs to create layered, thicket-like plant communities.

- Primary Species (Required):
  - Conocarpus erectus (Green Buttonwood)
  - Conocarpus erectus 'Sericeus' (Silver Buttonwood)
- These species are highly durable, salt-tolerant, wind-resistant, and well-suited to both coastal and inland Southwest Florida conditions.

Required Plant Characteristics

- *Form & Growth Habit*
  - *Buttonwood shall be maintained in a natural, informal growth habit*
  - *Clipping and shearing are discouraged and permitted only where required for:*
    - *Sightline preservation*
    - *Safety clearance*
  - *Plantings shall vary in height and width to avoid uniform, hedge-like appearance*
- *Caliper & Height*
  - *Groves shall include a mix of plant sizes to reinforce natural character*
  - *Combine:*
    - *Larger, small-tree forms for vertical structure*
    - *Shrub forms for mid- and lower-layer screening*

Spacing & Arrangement

Buttonwood Groves shall be arranged to replicate natural thicket formations, avoiding formal or repetitive layouts.

- Standards:
  - Install in loose, organic clusters, not rows
  - Stagger heights to create a layered vertical profile
  - Vary spacing to reflect natural conditions:
    - Tighter groupings at the core
    - Looser, more open placement toward edges
  - Integrate companion shrubs to create depth and visual complexity
  - Maintain selective openings to allow for airflow, light penetration, and visual permeability

Buttonwood Groves & Natural Screening (cont.)

Placement & Application

Buttonwood Groves shall be used to provide screening, transition, and ecological continuity across a variety of conditions.

- Perimeter Screening
  - Installed along parcel boundaries and buffer zones
  - Provide soft, layered privacy screening without rigid hedge conditions
  - Required where multi-story buildings need vertical landscape buffering
- Conservation & Preserve Edges
  - Used to blend development into adjacent natural systems
  - Reduce visual contrast and support habitat continuity
- Amenity & Park Edges
  - Define outdoor spaces and “rooms”
  - Screen utilities and service areas
  - Soften building edges and transitions
- Streetscapes & Medians (Selective Use)
  - May be incorporated in wide verges or medians
  - Shall be combined with grasses and groundcovers to maintain a cohesive composition

Understory & Companion Species

Buttonwood Groves shall incorporate a layered native understory to enhance screening and ecological function.

- Recommended Companion Shrubs:
  - Cocoplum (Chrysobalanus icaco)
  - Wax Myrtle (Myrica cerifera)
  - Simpson Stopper (Myrcianthes fragrans)
  - Saw Palmetto (Serenoa repens)
- Groundcovers & Grasses:
  - Fakahatchee Grass (Tripsacum dactyloides)
  - Sand Cordgrass (Spartina bakeri)
  - Pink Muhly (Muhlenbergia capillaris)
  - Golden Creeper (Ernodea littoralis)
- These species create textural variation, habitat value, and resilience, while reinforcing native ecotone conditions.

Buttonwood Groves & Natural Screening (cont.)

Function & Performance

- *Privacy & Screening*
  - *Provides layered, naturalized screening without forming solid visual barriers*
  - *Allows for selective visibility while maintaining privacy*
- *Sightline Protection*
  - *Plant heights and placement shall maintain required clear sightlines at:*
    - *Intersections*
    - *Driveways*
    - *Lakefront edges*
- *Ecological Benefits*
  - *Supports native wildlife, including birds and pollinators*
  - *Enhances storm resilience and soil stability*
  - *Mimics native coastal hammock and scrub systems*

Maintenance Requirements

- *Pruning*
  - *Minimal pruning required; remove only:*
    - *Dead*
    - *Damaged*
    - *Crossing branches*
  - *Maintain natural form; formal shaping and hedging are prohibited*
- *Watering & Establishment*
  - *Provide regular irrigation during establishment*
  - *Once established, Buttonwood is drought-tolerant and requires minimal supplemental irrigation*
- *Health & Monitoring*
  - *Monitor for scale and fungal conditions in humid environments*
  - *Maintain adequate spacing to promote air circulation and plant health*



Grasses & Groundcover Drifts

Grasses and groundcover drifts are a foundational component of the Babcock Ranch landscape, establishing continuity across neighborhoods, commercial areas, parks, and preserves. This typology reinforces a native, ecological aesthetic while enhancing biodiversity, stormwater performance, and long-term maintenance efficiency.

Inspired by the sweeping patterns of Southwest Florida prairies and flatwoods, drifts introduce texture, movement, and softness to the landscape. Planting shall be composed in organic, flowing forms, avoiding rigid, ornamental, or highly structured arrangements.

Defining a Drift

A drift is defined as a large, naturalized mass of a single plant species arranged in an organic pattern.

- Drifts shall be used to:
  - Unify planting beds
  - Simplify maintenance
  - Strengthen ecological function
  - Reinforce a cohesive, naturalistic landscape identity

Required Standards

- *Each drift shall consist of approximately 20 plants per grouping*
- *Drifts shall be arranged in organic, non-linear patterns (rows and grids are prohibited)*
- *No individual drift shall exceed 100 linear feet in length*

Approved Species

All species shall align with the Babcock Ranch Commercial and Residential Plant Palettes.

- Native Grasses:
  - Muhlenbergia capillaris — Pink Muhly Grass
  - Tripsacum dactyloides / floridana — Fakahatchee Grass
  - Spartina bakeri — Sand Cordgrass
  - Eragrostis curvula — Love Grass (limited and location-specific use)
- Spacing Standards:
  - Grasses shall be spaced at a maximum of 30–36 inches on center, per Residential Plant List
- Native Groundcovers:
  - Chrysobalanus icaco ‘Horizontalis’ — Horizontal Cocoplum
  - Ernodea littoralis — Golden Creeper
  - Mimosa strigillosa — Sunshine Mimosa
- Conditional Use:
  - Arachis glabrata — Perennial Peanut
    - Permitted as a Florida-friendly, non-native groundcover
    - Use shall be limited and subject to case-by-case review and approval

Grasses & Groundcover Drifts (cont.)

Composition & Layering

Drifts shall be designed to create a cohesive, natural pattern within planting areas and function in coordination with grove typologies (Pine, Live Oak, Sabal Palm, Buttonwood).

- Design Guidance:
  - Use sweeping, continuous forms that visually move through the landscape
  - Alternate between:
    - Taller grasses (e.g., Fakahatchee)
    - Lower groundcovers (e.g., Golden Creeper)
    - to create contrast and layering
  - Emphasize texture and movement over bold color contrast
  - Avoid high-contrast color blocking or ornamental patterns
  - Incorporate intentional voids or mulch pockets (up to 20% of bed area) to:
    - Prevent overcrowding
    - Provide visual relief

Location & Application

- Streetscapes & Verges
  - Provide a naturalized ground layer beneath canopy trees and shrubs
  - Must comply with required verge composition:
    - 50% grasses
    - 30% shrubs
    - 20% groundcovers
  - Minimum 80% native plant material required
- Medians
  - Create continuous, flowing patterns that unify roadway corridors
  - Reinforce connections to adjacent open spaces and preserves
- Parks & Open Spaces
  - Define spatial edges, trail corridors, and transitions to grove typologies
  - Reduce mowing, irrigation, and long-term maintenance requirements
- Buffer & Perimeter Zones
  - Provide soft, layered screening and habitat enhancement
  - Avoid dense hedge-like conditions

Spacing & Installation

- Spacing
  - Follow species-specific spacing (generally 30–36 inches on center)
- Patterning
  - Utilize triangular spacing to avoid grid patterns
  - Vary spacing slightly to replicate natural growth conditions
- Mulching
  - Use shredded hardwood mulch
  - Pine straw is prohibited except within Pine Grove typology

Grasses & Groundcover Drifts (cont.)

Function & Performance

- *Ecological Value*
  - *Supports pollinators, birds, and beneficial insects*
  - *Enhances biodiversity and soil health*
  - *Strengthens habitat systems when integrated with grove typologies*
- *Water & Maintenance Efficiency*
  - *Reduces irrigation demand once established*
  - *Suppresses weed growth when properly spaced and mulched*
  - *Promotes stormwater infiltration in rights-of-way and open space areas*
- *Aesthetic Continuity*
  - *Reinforces a consistent, native Florida landscape identity*
  - *Visually connects development to adjacent conservation areas*

Maintenance Requirements

- Maintain natural plant form; formal trimming is prohibited
- Cut back warm-season grasses annually as needed (late winter)
- Remove invasive or nuisance species promptly
- Reduce irrigation after establishment; avoid overspray onto pavement and structures





Verges & Medians

Verge and median landscapes are critical components of the Babcock Ranch public realm, shaping the day-to-day experience of streets, neighborhoods, and corridors. These areas establish a consistent, native-driven landscape framework that enhances walkability, safety, ecological performance, and visual continuity across the community.

Planting within verges and medians shall reflect a naturalistic Southwest Florida character, while meeting operational requirements for visibility, durability, and long-term sustainability.

Any and all mulch types are strictly prohibited with verge and median areas.

Purpose

Verge and median landscapes shall:

- Reinforce community identity and visual cohesion
- Improve pedestrian comfort through shade and reduced heat gain
- Support stormwater infiltration and soil health
- Provide native habitat and pollinator support
- Maintain clear and safe sightlines along roadways and intersections

Design shall be coordinated with adjacent land uses to ensure a seamless transition between residential, commercial, and open space environments.

Prohibited Materials

- The following are not permitted within verge and median landscapes:
  - Boulders or decorative rock features
  - Artificial turf
  - Invasive plant species
  - Pine straw mulch (reserved exclusively for Pine Grove typology)

General Requirements

- Minimum 80% native plant material required
- Planting design shall emphasize simplicity, repetition, and natural flow
- Landscapes shall be designed for low water use and long-term durability

Planting Structure & Layout

- Drifts & Groupings
  - Install plants in large, naturalized drifts (approximately 20 plants per grouping)
  - Drifts shall be arranged in organic, flowing patterns
  - Rows and geometric layouts are prohibited
  - Individual drifts shall not exceed 75–100 linear feet, based on available space
- Layering
  - Grasses shall form the dominant ground plane
  - Shrubs shall provide punctuation and selective screening
  - Groundcovers shall define edges and transitional zones

Verges & Medians (cont.)

Tree Requirements

- Placement
  - Medians: Trees shall be centered within the median
  - Verges: Trees shall maintain adequate offset from sidewalks and infrastructure
- Minimum Setbacks
  - Trees with expansive root systems (e.g., Live Oak) shall maintain a minimum 3-foot offset from sidewalk edge
  - Root barriers or structural soil systems shall be provided where required
- Approved Tree Types
  - Quercus virginiana and Q. virginiana ‘Boardwalk’ (Live Oak)
  - Conocarpus erectus (Buttonwood)
  - Sabal palmetto (Cabbage Palm)
  - Pinus elliottii var. densa (Slash Pine), in select naturalized corridors
- All tree placement shall align with established grove typologies to maintain consistency across the community.

Sightline & Safety Standards

- Intersection Visibility
  - Maintain clear sight triangles at all intersections
  - Use low grasses and groundcovers in visibility zones
  - Shrubs shall be limited or omitted where they obstruct views
- Roadway & Pedestrian Safety
  - Avoid tall or dense plantings near:
    - Crosswalks
    - Intersections
    - Signalized areas
  - Ensure visibility of:
    - Signage
    - Lighting
    - Traffic conditions
- Utilities & Easements
  - Only low-growing shrubs and groundcovers are permitted within easements
  - Larger shrubs and tree-form species (e.g., Wax Myrtle, Buttonwood) are prohibited in utility conflict zones

Recommended Plant Palette

- Grasses
  - Pink Muhly (Muhlenbergia capillaris)
  - Sand Cordgrass (Spartina bakeri)
  - Fakahatchee Grass (Tripsacum dactyloides)

Verges & Medians (cont.)

Recommended Plant Palette (cont.)

- Shrubs
  - Cocoplum (Chrysobalanus icaco)
  - Firebush (Hamelia patens)
  - Wax Myrtle (Myrica cerifera)
  - Dwarf Walter's Viburnum (Viburnum obovatum 'Densa')
- Groundcovers
  - Golden Creeper (Ernodea littoralis)
  - Horizontal Cocoplum (Chrysobalanus icaco 'Horizontalis')
  - Perennial Peanut (Arachis glabrata)
  - Sunshine Mimosa (Mimosa strigillosa)

Function & Performance

- Environmental Performance
  - Supports native wildlife and pollinators
  - Reduces irrigation demand
  - Improves stormwater infiltration and soil conditions
  - Reinforces native vegetative systems
- Aesthetic Performance
  - Creates a consistent, community-wide landscape identity
  - Enhances roadway corridors and neighborhood edges
  - Introduces rhythm and movement through drift planting
- Operational Performance
  - Simplifies long-term maintenance
  - Supports plant health through proper hydro-zoning
  - Minimizes conflicts with infrastructure and circulation systems

Maintenance Requirements

- Maintain natural plant forms; formal shaping is prohibited
- Utilize low-flow irrigation systems; avoid overspray onto pavement
- Remove invasive species immediately
- Maintain mulch depth to suppress weeds and retain moisture

Perimeter Buffers

Perimeter Buffers at Babcock Ranch define the transition between differing land uses, rights-of-way, and conservation areas. These buffers are not intended to be formal hedges or rigid barriers; instead, they are designed as naturalized, layered landscape systems that reflect Southwest Florida ecosystems while providing privacy, screening, and environmental performance.

Buffers must reinforce the community's native landscape identity, support habitat, and integrate seamlessly with adjacent open spaces and preserves.

Native Compliance

All Perimeter Buffers must meet DSM native planting thresholds:

- 75% native trees and shrubs on privately owned parcels
- 90% native trees and shrubs in public/commercial areas
- 100% native vegetation when adjacent to preserves, wetlands, or greenways
- ***Invasive species are strictly prohibited***

Grove-Based Buffer Design

- Buffers must utilize grove typologies (Pine, Live Oak, Buttonwood, or mixed native assemblages) rather than formal hedge rows.
- Plantings shall be arranged in natural clusters and drifts, not linear or symmetrical layouts.
- Buffers must create depth through layered planting (canopy + understory + groundcover).
- (Landscape Principles)

Sod & Turf Restrictions

- *Sod is not permitted within perimeter buffer zones.*
- *Ground plane must consist of native grasses, shrubs, or approved groundcovers.*

Buffer Width & Composition

- *Buffer widths must be sufficient to provide effective screening and ecological transition.*
- *Multi-story buildings or high-intensity uses require increased buffer depth and taller plant material.*
- *Recommended composition:*
  - *Canopy layer: Pines, Live Oaks, or Sabal Palms*
  - *Understory layer: Cocoplum, Wax Myrtle, Simpson Stopper*
  - *Ground plane: Native grasses and groundcover drifts*

Berming Requirements

- *Berms must be natural in form, avoiding continuous or engineered linear shapes.*
- *Maximum slope: 4:1 to ensure integration with surrounding landscape.*
- *Berm height must not obstruct visibility or create artificial barriers.*

Perimeter Buffers (cont.)

Visibility & Safety

- Buffers must maintain clear sightlines at intersections, entrances, and roadways.
- Plant heights and placement must not obstruct:
  - Traffic visibility
  - Pedestrian crossings
  - Signage or wayfinding elements

Adjacent to Preserves & Conservation Areas

- Buffers adjacent to natural preserves must consist of 100% native plant material
- Plant selections must be compatible with surrounding ecosystems to prevent invasive spread
- Transition zones should appear seamless and natural, blending into existing vegetation.

Design Intent

The intent of Perimeter Buffers is to:

- Provide natural screening and privacy without rigid barriers
- Create soft transitions between land uses
- Reinforce the native ecological framework of the community
- Support wildlife habitat and biodiversity
- Reduce visual and environmental impacts of development
- Maintain a cohesive, naturalistic aesthetic across all districts

Maintenance Expectations

- Maintain plantings in natural form; formal hedging is not permitted.
- Remove invasive species immediately.
- Replace dead or declining plant material with approved native species.
- Maintain mulch coverage and soil health.
- Ensure long-term plant spacing allows for mature growth without overcrowding.

Berm Buffer Abutting Preserve Plant Species			
Common Name	**Scientific Name**	**Spacing**	**Container Size**
Fakahatchee Grass	*Tripsacum dactyloides*	5’	1 Gallon
Pink Muhly Grass	*Muhlenbergia capillaris*	5’	1 Gallon
Sand Cord grass	*Spartina bakeri*	5’	1 Gallon
Wiregrass	*Aristida spp.*	5’	1 Gallon
Saw Palmetto	*Serenoa repens*	5’	1 Gallon
Slash Pine	*Pinus elliotti*	25’	1 Gallon
Red Maple	*Acer rubrum*	15’	1 Gallon
Wax Myrtle	*Myrica cerifera*	15’	1 Gallon
Dahoon Holly	*Ilex cassine*	15’	1 Gallon
Gallberry	*Ilex glabra*	15’	1 Gallon

Lakefront Buffer & Littoral Zones

Lakefront Buffers and Littoral Zones are critical components of Babcock Ranch's ecological infrastructure. These areas provide the transition between upland development and water bodies, supporting stormwater performance, habitat creation, and long-term shoreline stability.

Designs must prioritize native vegetation, natural form, and unobstructed views, ensuring that lake edges function as both environmental systems and visual amenities.

Native Planting Requirements

All lakefront and littoral areas must comply with DSM native planting standards:

- 100% native plant material required within littoral zones and ecological edges.
- Adjacent buffer areas must meet:
  - 75% native.
  - 90% native.
- Invasive species are strictly prohibited.

Littoral Zone Requirements

- Littoral shelves must be provided along the entire perimeter of lakes and stormwater systems.
- Minimum littoral planting zone: 15 feet in width.
- Plantings must consist of water-tolerant native species capable of adapting to fluctuating water levels.
- Turfgrass is not permitted within littoral zones.

Lakefront Buffer Requirements

- Buffers must be designed as naturalized planting zones, not formal hedges or rigid barriers
- Use layered planting consisting of:
  - Canopy (Sabal Palms, Buttonwoods where appropriate)
  - Understory shrubs
  - Native grasses and groundcovers
- Sod is not permitted within lakefront buffers

Visibility & View Preservation

- Lakefront design must maintain clear view corridors to the water.
- Shrub height along rear property lines adjacent to lakes must be limited to:
  - Maximum 30 inches to preserve sightlines.
- Dense hedges or continuous screening along lake edges are prohibited.
- Planting placement must not obstruct pedestrian or safety visibility.

Lakefront Buffer & Littoral Zones (cont.)

Stormwater & Environmental Performance

- Littoral plantings must:
  - Stabilize lake banks
  - Filter runoff and improve water quality
  - Support aquatic and shoreline habitat
- Rain gardens, bioswales, and vegetated swales are encouraged to integrate upland drainage with lake systems

Recommended Lakefront Plant Palette

- *Palms & Trees; Used to frame views, not block them:*
  - *Sabal Palmetto (clustered hammocks)*
  - *Green or Silver Buttonwood (tree form, spaced intentionally)*
- *Understory Shrubs (sparingly, low height)*
  - *Cocoplum*
  - *Simpson Stopper*
  - *Silver Saw Palmetto (select areas)*
  - *Wax Myrtle (only where not on the waterline)*

Littoral Shelf Wetland Species (ISD-defined)

Must be native and water-tolerant. These species vary by lake design and are reviewed during engineering

- *Pickerelweed*
- *Arrowhead*
- *Soft Rush*
- *Duck Potato*

Groundcovers & Grasses

- *Sunshine Mimosa*
- *Golden Creeper*
- *Fakahatchee Grass*
- *Sand Cordgrass*

Design Intent

Lakefront Buffers and Littoral Zones are intended to:

- Create a natural transition between land and water
- Preserve open views and community access to lakes
- Support stormwater management and water quality
- Provide habitat for wildlife and aquatic species
- Reinforce the native ecological identity of Babcock Ranch
- Reduce long-term maintenance through resilient plant systems

These areas must function as living systems—not ornamental edges—reflecting the community's commitment to sustainability and environmental stewardship.

Lakefront Buffer & Littoral Zones (cont.)

Lake Littoral Shelf Planting Species		
Common Name	**Scientific Name**	**Notes**
Arrowhead	*Sagittaria latifolia*	
Blue Flag Iris	*Iris virginica*	
Hardstem Bulrush	*Scirpus acutus*	*Use Sparingly; between lot lines or where no homes are present (along spine roads)*
Pickerel Weed	*Pontederia cordata*	
Sand Cord Grass	*Spartina bakeri*	
Softstem Bulrush	*Scirpus validus*	*Use Sparingly; between lot lines or where no homes are present (along spine roads)*
Spikerush	*Eleocharis spp.*	
Yellow Canna	*Canna flaccida*	

Open Space

Open Space is a defining element of the community's structure, creating a continuous network of parks, greenways, natural preserves, and civic spaces. These areas are designed to balance environmental stewardship, recreation, and visual cohesion, ensuring that all open spaces function as both ecological systems and meaningful places for people.

Open Space must reflect the native Florida landscape, integrate with stormwater systems, and provide accessible, comfortable environments that enhance the overall quality of life.

Native Planting Compliance

All open space areas must meet DSM native planting standards:

- 100% native vegetation required in greenways, preserves, and ecological corridors
- 90% native trees and shrubs in public open spaces
- Invasive species are strictly prohibited

Landscape Composition

Open Space must be designed using naturalized planting typologies that reflect regional ecosystems:

- Grove Typologies: Pine, Oak, Sabal Palm, and Buttonwood
- Layered Planting: Canopy, understory, shrub, and groundcover
- Grasses & Drift Plantings: Native grasses and groundcovers in massed groupings

Planting design must prioritize ecological function over ornamental display and reduce dependence on turfgrass

Turf & Ground Plane

- Turfgrass is limited to active recreation areas only (fields, play areas, gathering lawns).
- Passive open spaces must utilize native grasses, groundcovers, and naturalized plantings.
- Turf areas must be minimized to reduce irrigation demand.

Connectivity & Access

- Open Space must contribute to a connected network of trails, sidewalks, and greenways.
- Provide pedestrian access to parks, lakes, and natural areas.
- Integrate with surrounding neighborhoods and civic uses.

Designs must prioritize walkability, safety, and accessibility.

Stormwater Integration

Open Space areas must be designed to function as part of the community's stormwater system:

- Incorporate bioswales, rain gardens, and vegetated conveyance systems.
- Integrate with littoral zones and lakefront buffers.
- Support infiltration, filtration, and water quality improvements.
- Avoid excessive grading that disrupts natural hydrology.

Open Space (cont.)

Stormwater & Hydrology Integration

Open spaces play a critical role in stormwater management.

- Littoral & Pond-Edge Planting
  - A minimum 15-foot littoral shelf with native wetland species is required around lake edges.
  - Homeowners maintain the sod area to the edge of the littoral shelf in adjacent lots, but native planting remains intact.
- Rain Gardens, Swales & Drainage Areas
  - Open spaces should integrate nature-based drainage features such as rain gardens, bioswales, and vegetated conveyance zones.
  - Hardscape edges should blend into planting using groundcovers or grasses rather than sod.
- Wetland Adjacency
  - Plant palettes must be strictly native when adjacent to conservation easements.
  - No invasive or aggressive species allowed.

Maintenance & Longevity

- Low-Maintenance Approach
  - Open space landscapes rely on hardy native species that require minimal irrigation once established.
  - Mulch must be shredded brown hardwood; cypress mulch is prohibited.
- Tree & Shrub Growth Management
  - Pruning must maintain natural form; avoid shearing unless necessary for safety.
  - Allow groves to mature naturally, supporting long-term canopy development.
- Irrigation
  - Permanent irrigation may be eliminated after establishment, depending on plant material and location.
  - If irrigation is provided, it must be low-flow, hydrozoned, and designed to avoid overspray.

Amenities & Programming

Open Space may include:

- Passive recreation areas (lawns, shaded seating areas)
- Active recreation (fields, playgrounds, fitness areas)
- Trails, boardwalks, and nature paths
- Civic gathering spaces

All amenities must be integrated into the landscape and designed to complement natural systems.

Design Intent

The intent of Open Space at Babcock Ranch is to:

- Create a connected, community-wide landscape network
- Support recreation and outdoor living
- Preserve and enhance native ecosystems
- Provide shade, comfort, and human-scale environments
- Integrate stormwater infrastructure into usable space
- Reinforce the identity of Babcock Ranch as a nature-forward community

Open Space should feel immersive, natural, and seamlessly connected to surrounding development.